DESIGN MANUAL FOR STRUCTURAL STAINLESS STEEL

4TH EDITION

SCI
Steel Knowledge

DESIGN MANUAL FOR STRUCTURAL STAINLESS STEEL

4TH EDITION

DESIGN MANUAL FOR STRUCTURAL STAINLESS STEEL

4TH EDITION

SCI (The Steel Construction Institute) is the leading, independent provider of technical expertise and disseminator of best practice to the steel construction sector. We work in partnership with clients, members and industry peers to help build businesses and provide competitive advantage through the commercial application of our knowledge. We are committed to offering and promoting sustainable and environmentally responsible solutions.

Our service spans the following areas:

Membership
Individual & corporate membership

Advice
Members advisory service

Information
Publications
Education
Events & training

Consultancy
Development
Product development
Engineering support
Sustainability

Assessment
SCI Assessment

Specification
Websites
Engineering software

Front cover credits

Top left:
Canopy, Napp Pharmaceutical, Cambridge, UK
Grade 1.4401, Courtesy: m-tec

Top right:
Skid for offshore regasification plant,
Grade 1.4301, Courtesy: Montanstahl

Bottom left:
Dairy Plant at Cornell University, College of Agriculture and Life Sciences,
Grade 1.4301/7, Courtesy: Stainless Structurals

Bottom right:
Águilas footbridge, Spain
Grade 1.4462, Courtesy Acuamed

© 2017 SCI. All rights reserved.

Publication Number: **SCI P413**

ISBN 13: 978-1-85942-226-7

Published by:
SCI, Silwood Park, Ascot,
Berkshire. SL5 7QN UK

T: +44 (0)1344 636525
F: +44 (0)1344 636570
E: reception@steel-sci.com

www.steel-sci.com

To report any errors, contact:
publications@steel-sci.com

Apart from any fair dealing for the purposes of research or private study or criticism or review, as permitted under the Copyright Designs and Patents Act, 1988, this publication may not be reproduced, stored or transmitted, in any form or by any means, without the prior permission in writing of the publishers, or in the case of reprographic reproduction only in accordance with the terms of the licences issued by the UK Copyright Licensing Agency, or in accordance with the terms of licences issued by the appropriate Reproduction Rights Organisation outside the UK.

Enquiries concerning reproduction outside the terms stated here should be sent to the publishers, SCI.

Although care has been taken to ensure, to the best of our knowledge, that all data and information contained herein are accurate to the extent that they relate to either matters of fact or accepted practice or matters of opinion at the time of publication, SCI, the authors and the reviewers assume no responsibility for any errors in or misinterpretations of such data and/or information or any loss or damage arising from or related to their use.

Publications supplied to the members of the Institute at a discount are not for resale by them.

British Library Cataloguing-in-Publication Data.
A catalogue record for this book is available from the British Library.

The text paper in this publication is totally chlorine free. The paper manufacturer and the printers have been independently certified in accordance with the rules of the Forest Stewardship Council.

FSC MIX Paper from responsible sources FSC® C013262 www.fsc.org
REPLICA

recycle
When you have finished with this please recycle it.

PREFACE

Fourth Edition

This Fourth Edition of the Design Manual has been prepared by Nancy Baddoo of The Steel Construction Institute as part of the RFCS Project *Promotion of new Eurocode rules for structural stainless steels* (PUREST) (contract 709600).

It is a complete revision of the Third Edition; the major changes are as follows:

- Alignment with the 2015 amendment to EN 1993-1-4,
- Inclusion of ferritic stainless steels, based on the work of the Structural applications of ferritic stainless steels (SAFSS) project (RFSR-CT-2010-00026),
- New data on the thermal and mechanical properties of stainless steels in fire are added,
- The design data, design rules and references to current versions of European standards, including EN 10088, EN 1993 and EN 1090 are updated,
- Addition of an annex on material modelling,
- Addition of an annex which gives a method for calculating an enhanced strength arising from cold forming,
- Addition of an annex which gives less conservative design rules by exploiting the benefits of strain hardening through the use of the Continuous Strength Method.

The organisations who participated in the PUREST project were:

The Steel Construction Institute (SCI) *(co-ordinator)* Silwood Park, Ascot, SL5 7QN, United Kingdom www.steel-sci.com	**Universitat Politècnica de Catalunya (UPC)** Calle Jordi Girona 31, Barcelona 08034, Spain www.upc.edu
Universität Duisburg-Essen (UDE) Universitätsstraße 2, Essen 45141, Germany www.uni-due.de	**Katholieke Universiteit Leuven (KU Leuven)** Oude Markt 13, Leuven 3000, Belgium www.kuleuven.be
RINA Consulting-Centro Sviluppo Materiali S.p.A. (CSM) Via Di Castel Romano 100, Rome 00128, Italy www.rinaconsulting.org/en/csm	**Stalbyggnadinstitutet (SBI)** Kungsträdgårdsgatan 10, 111 47 Stockholm, Sweden www.sbi.se
Politechnika Rzeszowska im. Ignacego Lukasiewicza (PRz) al. Powstancow Warszawy 12, Rzeszów, 35 959, Poland www.prz.edu.pl	**Imperial College of Science Technology and Medicine** South Kensington Campus Exhibition Road, London, SW7 2AZ, United Kingdom www.imperial.ac.uk
Teräsrakenneyhdistys ry Unioninkatu 14 3 krs, Helsinki 00130, Finland www.terasrakenneyhdistys.fi	**České vysoké učení technické v Praze (CVUT)** Zikova 4, Praha 16636, Czech Republic www.cvut.cz
Universidade de Coimbra Paço das Escolas, Coimbra, 3001 451, Portugal www.uc.pt	**OneSource Consultoria Informática** Urbanizaçao Ferreira Jorge - 1° dto Lote 14, Coimbra 3040 016 , Portugal www.onesource.pt

The following people made a valuable contribution to the preparation of this Fourth Edition:

- Sheida Afshan (Brunel University London, UK)
- Itsaso Arrayago (Universitat Politècnica de Catalunya, Spain)
- Leroy Gardner (Imperial College London, UK)
- Graham Gedge (Arup, UK)
- Michal Jandera (Czech Technical University of Prague, Czech Republic)
- Esther Real (Universitat Politècnica de Catalunya, Spain)
- Barbara Rossi (KU Leuven, Belgium)
- Natalie Stranghöner (Universität Duisberg-Essen, Germany)
- Ou Zhao (Nanyang Technological University, Singapore)

Preface to the Third Edition

This Third Edition of the Design Manual has been prepared by The Steel Construction Institute as a deliverable of the RFCS Project - *Valorisation Project – Structural design of cold worked austenitic stainless steel* (contract RFS2-CT-2005-00036). It is a complete revision of the Second Edition, extending the scope to include cold worked austenitic stainless steels and updating all the references to draft Eurocodes. The Third Edition refers to the relevant parts of EN 1990, EN 1991 and EN 1993. The structural fire design approach in Section 8 has been updated and new sections on the durability of stainless steel in soil and life cycle costing have been added. Three new design examples have been included to demonstrate the appropriate use of cold worked stainless steel. A project steering committee, including representatives from each partner and sponsoring organisation, oversaw the work and contributed to the development of the Design Manual. The following organisations participated in the preparation of the Third Edition:

- The Steel Construction Institute (SCI) *(Project co-ordinator)*
- Centro Sviluppo Materiali (CSM)
- CUST, Blaise Pascal University
- Euro Inox
- RWTH Aachen, Institute of Steel Construction
- VTT Technical Research Centre of Finland
- The Swedish Institute of Steel Construction (SBI)
- Universitat Politècnica de Catalunya (UPC)

Preface to the Second Edition

This Design Manual has been prepared by The Steel Construction Institute as a deliverable of the ECSC funded project, *Valorisation Project – Development of the use of stainless steel in construction* (contract 7215-PP-056). It is a complete revision of the *Design manual for structural stainless steel*, which was prepared by The Steel Construction Institute between 1989 and 1992 and published by Euro Inox in 1994. This new edition takes into account advances in understanding in the structural behaviour of stainless steel over the last

10 years. In particular, it includes the new design recommendations from the recently completed ECSC funded project, *Development of the use of stainless steel in construction* (contract 7210-SA/842), which has led to the scope of the Manual being extended to cover circular hollow sections and fire resistant design. Over the last ten years a great many new European standards have been issued covering stainless steel material, fasteners, fabrication, erection, welding etc. The Manual has been updated to make reference to current standards and data in these standards.

ACKNOWLEDGEMENTS

The following organisations provided financial support for this edition of the Design Manual and their assistance is gratefully acknowledged:

- The European Union's Research Fund for Coal and Steel,
- Outokumpu,
- Aperam,
- Industeel,
- AcerInox,
- Companhia Brasileira de Metalurgia e Mineração (CBMM),
- Nickel Institute,
- Stalatube.

FOREWORD

This Design Manual has been prepared for the guidance of engineers experienced in the design of carbon steel structural steelwork though not necessarily in stainless steel structures. It is not in any way intended to have a legal status or absolve the engineer of responsibility to ensure that a safe and functional structure results.

The Manual is divided into two parts:

- Part I - Recommendations
- Part II - Design Examples

The Recommendations in Part I are formulated in terms of limit state philosophy and, in general, are in compliance with the current versions of the following Parts of Eurocode 3 *Design of steel structures*:

EN 1993-1-1	*Design of steel structures: General rules and rules for buildings*
EN 1993-1-2	*Design of steel structures: Structural fire design*
EN 1993-1-3	*Design of steel structures: General rules: Supplementary rules for cold-formed members and sheeting*
EN 1993-1-4	*Design of steel structures: General rules: Supplementary rules for stainless steels*
EN 1993-1-5	*Design of steel structures: Plated structural elements*
EN 1993-1-8	*Design of steel structures: Design of joints*
EN 1993-1-9	*Design of steel structures: Fatigue*
EN 1993-1-10	*Design of steel structures: Material toughness and through-thickness properties*

Eurocode 3 is currently under revision and a new version of each part, including EN 1993-1-4, is due for publication in about 2023. In certain instances, the Design Manual gives the new rules or design data which are likely to be included in this next edition of EN 1993-1-4. A shaded box explains the difference between these new rules and those rules currently in EN 1993-1-4:2015.

This Design Manual gives recommended values for certain factors. These values may be subject to modification at a national level by the National Annexes.

The Design Examples contained in Part II demonstrate the use of the recommendations. A cross-reference system locates that section of the examples corresponding to a particular recommendation.

The Recommendations and Design Examples are available online at www.steel-stainless.org/designmanual and at Steelbiz, the SCI technical information system (www.steelbiz.org). A Commentary to the Recommendations, which includes a full set of references, is also available online at these web sites. The purpose of the Commentary is to allow the designer to assess the basis of the recommendations and to facilitate the development of revisions as and when new data become available. Opportunity is taken to present the results of various test programmes conducted specifically to provide background data for the Design Manual.

Online design software and apps for mobile devices are also available from www.steel-stainless.org/designmanual which calculate section properties and member resistances for standard section sizes or user defined sections in accordance with the Recommendations in this Design Manual.

The design recommendations presented in this document are based upon the best knowledge available at the time of publication. However, no responsibility of any kind for injury, death, loss, damage or delay, however caused, resulting from the use of the recommendations can be accepted by the project partners or others associated with its preparation.

CONTENTS

PREFACE iii

ACKNOWLEDGEMENTS v

FOREWORD vii

PART 1 - RECOMMENDATIONS 1

1 INTRODUCTION 3
1.1 What is stainless steel? 3
1.2 Suitable stainless steels for structural applications 5
1.3 Applications of stainless steel in the construction industry 7
1.4 Scope of this Design Manual 8
1.5 Symbols 8
1.6 Conventions for member axes 11
1.7 Units 12

2 PROPERTIES OF STAINLESS STEELS 15
2.1 Basic stress-strain behaviour 15
2.2 Factors affecting stress-strain behaviour 17
2.3 Relevant standards and design strengths 18
2.4 Physical properties 28
2.5 Effects of temperature 29
2.6 Galvanizing and contact with molten zinc 29
2.7 Availability of product forms 29
2.8 Life cycle costing and environmental impact 32

3 DURABILITY AND SELECTION OF MATERIALS 35
3.1 Introduction 35
3.2 Types of corrosion and performance of steel grades 36
3.3 Corrosion in selected environments 40
3.4 Design for corrosion control 42
3.5 Selection of materials 44

4 BASIS OF DESIGN 51
4.1 General requirements 51
4.2 Limit state design 51
4.3 Loading 52

5 CROSS-SECTION DESIGN 55
5.1 General 55
5.2 Maximum width-to-thickness ratios 55
5.3 Classification of cross-sections 55
5.4 Effective widths 60
5.5 Stiffened elements 64
5.6 Calculation of geometric section properties 67
5.7 Resistances of cross-sections 70

6 MEMBER DESIGN 77
6.1 Introduction 77
6.2 Tension members 77
6.3 Compression members 78
6.4 Flexural members 82
6.5 Members subject to combinations of axial load and bending moments 93

7 JOINT DESIGN 97
7.1 General recommendations 97
7.2 Bolted connections 99
7.3 Mechanical fasteners for thin gauge material 105
7.4 Welded connections 105

8 DESIGN FOR FIRE RESISTANCE 113
8.1 General 113
8.2 Mechanical properties at elevated temperatures 114
8.3 Determination of structural fire resistance 117
8.4 Thermal properties at elevated temperatures 124
8.5 Material modelling at elevated temperatures 127

9 FATIGUE 129
9.1 General 129

10 TESTING 131
10.1 General 131
10.2 Stress-strain curve determination 131
10.3 Tests on members 132

11 FABRICATION ASPECTS 135
11.1 Introduction 135
11.2 EN 1090 *Execution of steel structures and aluminium structures* 135
11.3 Execution class 136
11.4 Storage and handling 137
11.5 Shaping operations 138
11.6 Welding 140
11.7 Galling and seizure 146
11.8 Finishing 146

ANNEX A - CORRELATION BETWEEN STAINLESS STEEL DESIGNATIONS 149

ANNEX B - STRENGTH ENHANCEMENT OF COLD FORMED SECTIONS 151

ANNEX C - MODELLING OF MATERIAL BEHAVIOUR 155

ANNEX D - CONTINUOUS STRENGTH METHOD 159

ANNEX E - ELASTIC CRITICAL MOMENT FOR LATERAL TORSIONAL BUCKLING 165

PART II - DESIGN EXAMPLES 169

PART 1 - RECOMMENDATIONS

INTRODUCTION

1.1 What is stainless steel?

Stainless steel is the name given to a family of corrosion and heat resistant steels containing a minimum of 10,5% chromium. Just as there are various structural and engineering carbon steels meeting different strength, weldability and toughness requirements, there is also a wide range of stainless steels with varying levels of corrosion resistance and strength. This array of stainless steel properties is the result of controlled alloying element additions, each affecting mechanical properties and the ability to resist different corrosive environments. It is important to select a stainless steel which is adequate for the application without being unnecessarily highly alloyed and costly.

With a combination of the chromium content above 10,5%, a clean surface and exposure to air or any other oxidizing environment, a transparent and tightly adherent layer of chromium-rich oxide forms spontaneously on the surface of stainless steel. If scratching or cutting damages the film, it reforms immediately in the presence of oxygen. Although the film is very thin, about 5×10^{-6} mm, it is both stable and nonporous. As long as the stainless steel is corrosion resistant enough for the service environment, it will not react further with the atmosphere. For this reason, it is called a passive film. The stability of this passive layer depends on the composition of the stainless steel, its surface treatment and the corrosiveness of its environment. Its stability increases as the chromium content increases and is further enhanced by alloying additions of molybdenum and nitrogen.

Stainless steels can be classified into the following five basic groups, with each group providing unique properties and a range of different corrosion resistance levels.

Austenitic stainless steels

The most widely used austenitic stainless steels are based on 17 to 18% chromium and 8 to 11% nickel additions. In comparison to structural carbon steels, which have a body-centred cubic atomic (crystal) structure, austenitic stainless steels have a face-centred cubic atomic structure. As a result, austenitic stainless steels, in addition to their corrosion resistance, have high ductility, are easily cold formed, and are readily weldable. Relative to structural carbon steels, they also have significantly better toughness over a wide range of temperatures. They can be strengthened by cold working, but not by heat treatment. Their corrosion performance can be further enhanced by higher levels of chromium and additions of molybdenum and nitrogen. They are by far the most frequently used stainless steels in building and construction.

Ferritic stainless steels

The chromium content of the most popular ferritic stainless steels is between 10,5% and 18%. Ferritic stainless steels contain either no or very small nickel additions and their body-centred atomic structure is the same as that of structural carbon steels. They cost less than the austenitic grades of equivalent corrosion resistance and show less price volatility. They are generally less ductile and less weldable than austenitic stainless steels. The forming and machining properties of ferritic stainless steels are similar to those of S355 structural carbon steel. They can be strengthened by cold working, but to a more limited degree than the austenitic stainless steels. Like the austenitic grades, they cannot be strengthened by heat treatment. Typical applications are in interior and mild exterior atmospheric conditions. They have good resistance to stress corrosion cracking and their corrosion performance can be further enhanced by additions of molybdenum. They offer a corrosion resistant alternative to many light gauge galvanized steel applications. Ferritic grades are generally used in gauges of 4 mm and below.

Duplex (austenitic-ferritic) stainless steels

Duplex stainless steels have a mixed microstructure of austenite and ferrite, and so are sometimes called austenitic-ferritic steels. They typically contain 20 to 26% chromium, 1 to 8% nickel, 0,05 to 5% molybdenum, and 0,05 to 0,3% nitrogen. Because they contain less nickel than the austenitic grades, they show less price volatility. They are about twice as strong as austenitic steels in the annealed condition which can make section size reduction possible - this can be very valuable in weight-sensitive structures like bridges or on offshore topsides. They are suitable for a broad range of corrosive environments. Although duplex stainless steels have good ductility, their higher strength results in more restricted formability, compared to the austenitic alloys. They can also be strengthened by cold working, but not by heat treatment. They have good weldability and good resistance to stress corrosion cracking. They can be seen as being complementary to ferritic stainless steels, as they are more likely to be used in heavier gauges.

Martensitic stainless steels

Martensitic stainless steels have a similar body-centred cubic structure as ferritic stainless steel and structural carbon steels, but due to their higher carbon content, they can be strengthened by heat treatment. Martensitic stainless steels are generally used in a hardened and tempered condition, which gives them high strength, and provides moderate corrosion resistance. They are used for applications that take advantage of their wear and abrasion resistance and hardness, like cutlery, surgical instruments, industrial knives, wear plates and turbine blades. They are less ductile and more notch sensitive than the ferritic, austenitic and duplex stainless steels. Although most martensitic stainless steels can be welded, this may require preheat and postweld heat treatment, which can limit their use in welded components.

Precipitation hardening stainless steels

Precipitation hardening steels can be strengthened by heat treatment to very high strengths and fall into three microstructure groups depending on the grade: martensitic, semi-austenitic and austenitic. These steels are not normally used in welded fabrication. Their corrosion resistance is generally better than the martensitic stainless steels and similar to the 18% chromium, 8% nickel austenitic stainless steels. Although they are mostly used in the aerospace industry, they are also used for tension bars, shafts, bolts and other applications requiring high strength and moderate corrosion resistance.

Guidance on grade selection for particular applications is given in Section 3.5.

1.2 Suitable stainless steels for structural applications

This Design Manual applies to the austenitic, duplex and ferritic stainless steels which are most commonly encountered in structural applications. The compositions and strengths of some grades suitable for structural applications are given in Table 2.1 and Table 2.2 respectively.

EN 1993-1-4 lists a wider range of austenitic but a smaller range of ferritic alloys than covered in this Design Manual. It is expected that the range of ferritic alloys covered by EN 1993-1-4 will be extended in the next revision to include all the grades covered in this Design Manual.

The design rules in this Design Manual may also be applied to other austenitic, duplex and ferritic stainless steels covered in EN 10088, however see Section 4.2. The advice of a stainless steel producer or consultant should be sought regarding the durability, fabrication and weldability of other grades.

Austenitic stainless steels

Austenitic stainless steels are generally selected for structural applications which require a combination of good strength, corrosion resistance, formability (including the ability to make tighter bends), excellent field and shop weldability and, for seismic applications, very good elongation prior to fracture.

Grades 1.4301 (widely known as 304) and 1.4307 (304L) are the most commonly used standard austenitic stainless steels and contain 17,5 to 20% chromium and 8 to 11% nickel. They are suitable for rural, urban and light industrial sites.

Grades 1.4401 (316) and 1.4404 (316L) contain about 16 to 18% chromium, 10 to 14% nickel and the addition of 2 to 3% molybdenum, which improves corrosion resistance. They will perform well in marine and industrial sites.

Note: The “L” in the designation indicates a low carbon version with reduced risk of sensitisation (of chromium carbide precipitation) and of intergranular corrosion in heat affected zones of welds. Either the “L” grade, or a stabilised steel such as 1.4541 and

1.4571 should be specified for welded sections. Low carbon does not affect corrosion performance beyond the weld areas. When producers use state-of-the-art production methods, commercially produced stainless steels are often low carbon and dual certified to both designations (e.g. 1.4301/1.4307, with the higher strength of 1.4301 and the lower carbon content of 1.4307). When less modern technology is used, this cannot be assumed and therefore the low carbon version should be explicitly specified in the documents of projects in which welding is involved.

Grade 1.4318 is a low carbon, high nitrogen stainless steel which work hardens very rapidly when cold worked. It has a long track record of satisfactory performance in the railcar industry and is equally suitable for automotive, aircraft and architectural applications. Grade 1.4318 has similar corrosion resistance to 1.4301 and is most suitable for applications requiring higher strength than 1.4301 where large volumes are required. It is procured directly from the mill; specifiers interested in using 1.4318 should check availability directly with the mill. Its price is likely to be slightly higher than 1.4301, depending on the amount required.

High chromium grades, containing about 20% chromium, are now available and will be introduced into EN 10088 in future revisions. Grade 1.4420 is an example of a high chromium (and high nitrogen) grade which has a claimed corrosion resistance similar to 1.4401. It is stronger than the standard austenitic grades, with a design strength of around 390 N/mm^2 compared to 240 N/mm^2, whilst retaining good ductility.

Duplex stainless steels

Duplex stainless steels are appropriate where high strength, corrosion resistance and/or higher levels of crevice and stress corrosion cracking resistance are required.

1.4462 is an extremely corrosion resistant duplex grade, suitable for use in marine and other aggressive environments. An increasing use of stainless steels for load-bearing applications has led to increasing demand for duplex steels and development of new “lean” duplex grades. These grades are described as lean due to the reduced alloy contents of nickel and molybdenum which makes the grades significantly more cost effective. Lean grades have comparable mechanical properties to 1.4462 and a corrosion resistance which is comparable to the standard austenitic grades. This makes them appropriate for use in many onshore exposure conditions. Four lean duplex grades were added into EN 1993-1-4 in the 2015 amendment as they have become more widely available.

Ferritic stainless steels

The two “standard” ferritic grades which are suitable for structural applications and commonly available are 1.4003 (a basic ferritic grade containing about 11% chromium) and 1.4016 (containing about 16,5% chromium, with greater resistance to corrosion than 1.4003). Welding impairs the corrosion resistance and toughness of grade 1.4016 substantially.

Modern stabilised ferritic grades, for example 1.4509 and 1.4521, contain additional alloying elements such as niobium and titanium which lead to significantly improved welding and forming characteristics. Grade 1.4521 contains 2% molybdenum which improves pitting and crevice corrosion resistance in chloride containing environments (it has similar pitting corrosion resistance to 1.4401). 1.4621 is a recently developed ferritic grade that contains around 20% chromium, with improved polishability compared to 1.4509 and 1.4521.

1.3 Applications of stainless steel in the construction industry

Stainless steels have been used in construction ever since they were invented over one hundred years ago. Stainless steel products are attractive and corrosion resistant with low maintenance requirements and have good strength, toughness and fatigue properties. Stainless steels can be fabricated using a range of engineering techniques and are fully recyclable at end-of-life. They are the material of choice for applications situated in aggressive environments including buildings and structures in coastal areas, exposed to de-icing salts and in polluted locations.

The high ductility of stainless steel is a useful property where resistance to seismic loading is required since greater energy dissipation is possible; however, seismic applications are outside the scope of this Design Manual.

Typical applications for austenitic and duplex grades include:

- Beams, columns, platforms and supports in processing plant for the water treatment, pulp and paper, nuclear, biomass, chemical, pharmaceutical, and food and beverage industries
- Primary beams and columns, pins, barriers, railings, cable sheathing and expansion joints in bridges
- Seawalls, piers and other coastal structures
- Reinforcing bar in concrete structures
- Curtain walling, roofing, canopies, tunnel lining
- Support systems for curtain walling, masonry, tunnel lining etc.
- Security barriers, hand railing, street furniture
- Fasteners and anchoring systems in wood, stone, masonry or rock
- Structural members and fasteners in swimming pool buildings (special precautions should be taken for structural components in swimming pool atmospheres due to the risk of stress corrosion cracking in areas where condensates may form (see Section 3.5.3)
- Explosion- and impact- resistant structures such as security walls, gates and bollards
- Fire and explosion resistant walls, cable ladders and walkways on offshore platforms

Ferritic grades are used for cladding and roofing buildings, as well as for solar water heaters and potable water pipes. They are also used for indoor applications such as

elevators and escalators. In the transportation sector, they are used for load-bearing members, such as tubular bus frames. They also have a good track record of usage in coal railway wagons, where wet sliding abrasion resistance is important. Although currently they are not widely used for structural members in the construction industry, they have the potential for greater application for strong and moderately durable structural elements with attractive metallic surface. For composite structures where a long service life is required, or where the environmental conditions are moderately corrosive, ferritic decking may provide a more economically viable solution than galvanized decking which may struggle to retain adequate durability for periods greater than 25 years. In addition to composite floor systems, other potential applications where ferritic stainless steel is a suitable substitute for galvanized steel include permanent formwork, roof purlins and supports to services such as cable trays. They could also be used economically in semi-enclosed unheated environments (e.g. railways, grandstands, bicycle sheds) and in cladding support systems, windposts and for masonry supports.

1.4 Scope of this Design Manual

The recommendations given in this Design Manual apply to the grades of stainless steel that are typically used in structural applications. The recommendations are intended primarily for the design of elements and secondary structural components of buildings, offshore installations and similar structures. They should not be applied to special structures such as those in nuclear installations or pressure vessels for which specific standards for stainless steel application already exist.

The recommendations concern aspects of material behaviour, the design of cold formed, welded and hot rolled members, and their connections. They are applicable to austenitic, duplex and ferritic grades of stainless steel. Only the rolled versions, as opposed to castings, are considered. (Note that the properties of castings may be different from their rolled versions, e.g. austenitic stainless steel castings may be slightly magnetic.)

The recommendations have been formulated using limit state philosophy and align with the provisions in Eurocode 3: Part 1.4: *Design of Steel Structures, General Rules-Supplementary rules for structural stainless steels* (EN 1993-1-4), unless specifically noted otherwise.

1.5 Symbols

In general, the symbols used in this Design Manual are the same as used in EN 1993 1-1: Eurocode 3, *Design of steel structures: General rules and rules for buildings*.

Dimensions and axes of sections are illustrated in Figure 1.1.

Latin upper case letters

E	Modulus of elasticity; Effect of actions
F	Action; Force
G	Shear modulus
I	Second moment of area
L	Length; Span; System length
M	Bending moment
N	Axial force
R	Resistance
V	Shear force
W	Section modulus

Greek upper case letters

Δ	Difference in ..... (precedes main symbol)

Latin lower case letters

a	Distance between stiffeners; Throat thickness of a weld
b	Width; Breadth
c	Distance; Outstand
d	Diameter; Depth
e	Eccentricity; Shift of neutral axis; Edge distance; End distance
f	Strength (of a material)
g	Gap
h	Height
i	Radius of gyration; Integer
k	Coefficient; Factor
l	Buckling length
m	Constant
n	Number of ...
p	Pitch; Spacing
q	Distributed force
r	Radius; Root radius
s	Staggered pitch
t	Thickness
u-u	Major axis
v-v	Minor axis
w	Curling deformation
x-x, y-y, z-z	Rectangular axes

Greek lower case letters

α	(alpha)	Ratio; Factor
β	(beta)	Ratio; Factor
γ	(gamma)	Partial factor
ε	(epsilon)	Strain; Coefficient $\varepsilon = \left[\frac{235}{f_y}\frac{E}{210\,000}\right]^{0,5}$
λ	(lambda)	Slenderness ratio (a bar above indicates non dimensional)
ρ	(rho)	Reduction factor
σ	(sigma)	Normal stress
τ	(tau)	Shear stress
ϕ	(phi)	Ratio
χ	(chi)	Reduction factor (for buckling)
ψ	(psi)	Stress ratio; Reduction factor

Subscripts

a	Average
b	Bearing; Buckling; Bolt
c	Cross section
cr	Critical
d	Design
E	Euler; Internal force; Internal moment
eff	Effective
e	Effective (with further subscript)
el	Elastic
f	Flange
g	Gross
i, j, k	Indices (replace by numeral)
k	Characteristic
LT	Lateral-torsional
M	(Allowing for) bending moment
N	(Allowing for) axial force
net	Net
o	Initial
p	Proof
pl	Plastic
R	Resistance
r	Reduced value
S	Secant
s	Tensile stress (area); Stiffener
t	Tension; Tensile; Torsion
u	Major axis of cross-section; Ultimate
V	(Allowing for) shear force

v	Shear; Minor axis of cross-section
w	Web; Weld; Warping
x	Axis along member
y	Yield (proof value); Axis of cross-section (major axis except for unsymmetric sections)
z	Axis of cross-section (minor axis except for unsymmetric sections)
σ	Normal stress
τ	Shear stress

1.6 Conventions for member axes

In general, the convention for member axes is:

x-x	along the length of the member.
y-y	cross-section axis perpendicular to web, or the larger leg in the case of angle sections.
z-z	cross-section axis parallel to web, or the larger leg in the case of angle sections.

The yy axis will normally be the major axis of the section and the *z-z* axis will normally be the minor axis. For angle sections, the major and minor axes (*u-u* and *v-v*) are inclined to the *y-y* and *z-z* axes, see Figure 1.1.

The convention used for subscripts which indicate axes for moments is:

"Use the axis about which the moment acts".

For example, for an I-section a bending moment acting in the plane of the web is denoted M_y because it acts about the cross-section axis perpendicular to the web.

Figure 1.1 Dimensions and axes of sections

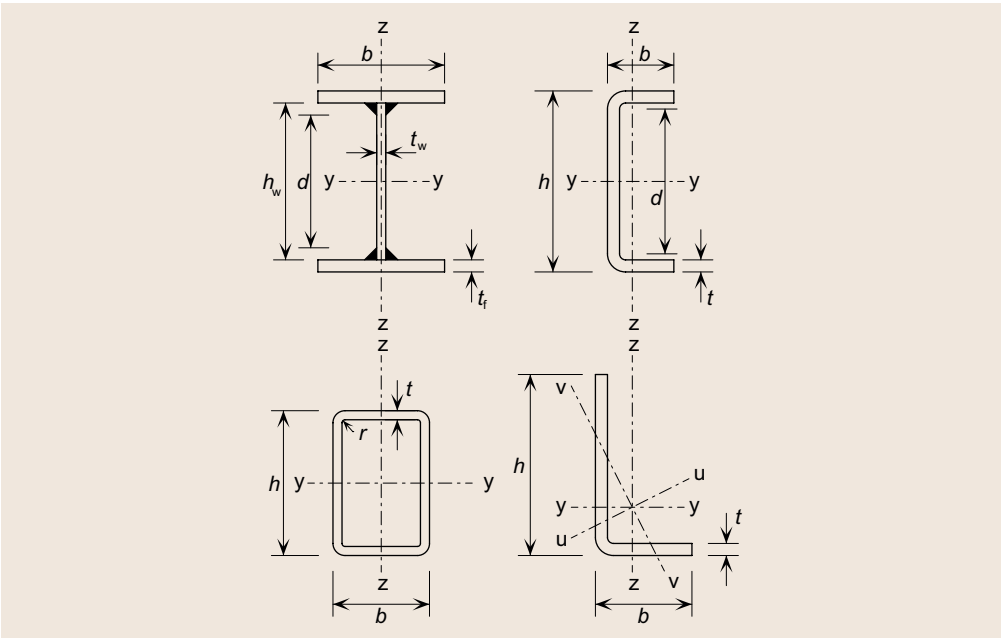

1.7 Units

For calculations, the following units are recommended:

- forces and loads kN, kN/m, kN/m^2
- unit mass kg/m^3
- unit weight kN/m^3
- stresses and strengths N/mm^2 (= MN/m^2 or MPa)
- bending moments kNm.

Note that, in accordance with European practice, a “,” symbol is used to separate the integer part from the decimal part in a number.

PROPERTIES OF STAINLESS STEELS

2.1 Basic stress-strain behaviour

The stress strain behaviour of stainless steels differs from that of carbon steels in a number of respects. The most important difference is in the shape of the stress strain curve. Whereas carbon steel typically exhibits linear elastic behaviour up to the yield strength and a plateau before strain hardening is encountered, stainless steel has a more rounded response with no well defined yield strength. Figure 2.1 compares the stress-strain characteristics of various stainless steels with carbon steels for strains up to 0,75% and Figure 2.2 shows typical stress-strain curves to failure. The figures show stress-strain curves which are representative of the range of material likely to be supplied and should not be used in design.

Stainless steel "yield" strengths are generally quoted in terms of a proof strength defined for a particular offset permanent strain (conventionally the 0,2% strain). Figure 2.3 defines the 0,2% proof strength, which is also called the 0,2% offset yield strength. The proportional limit of stainless steels ranges from 40 to 70% of the 0,2% proof strength.

Note that the response of ferritic stainless steel lies somewhere between that of carbon steel and austenitic stainless steel in that it is not quite as rounded or non-linear as the austenitic grades but offers more strength than carbon steel.

Stainless steels can absorb considerable impact without fracturing due to their excellent ductility (especially the austenitic grades) and their strain hardening characteristics.

Figure 2.1
Stress-strain curves for stainless steel and carbon steel from 0 to 0,75 % strain

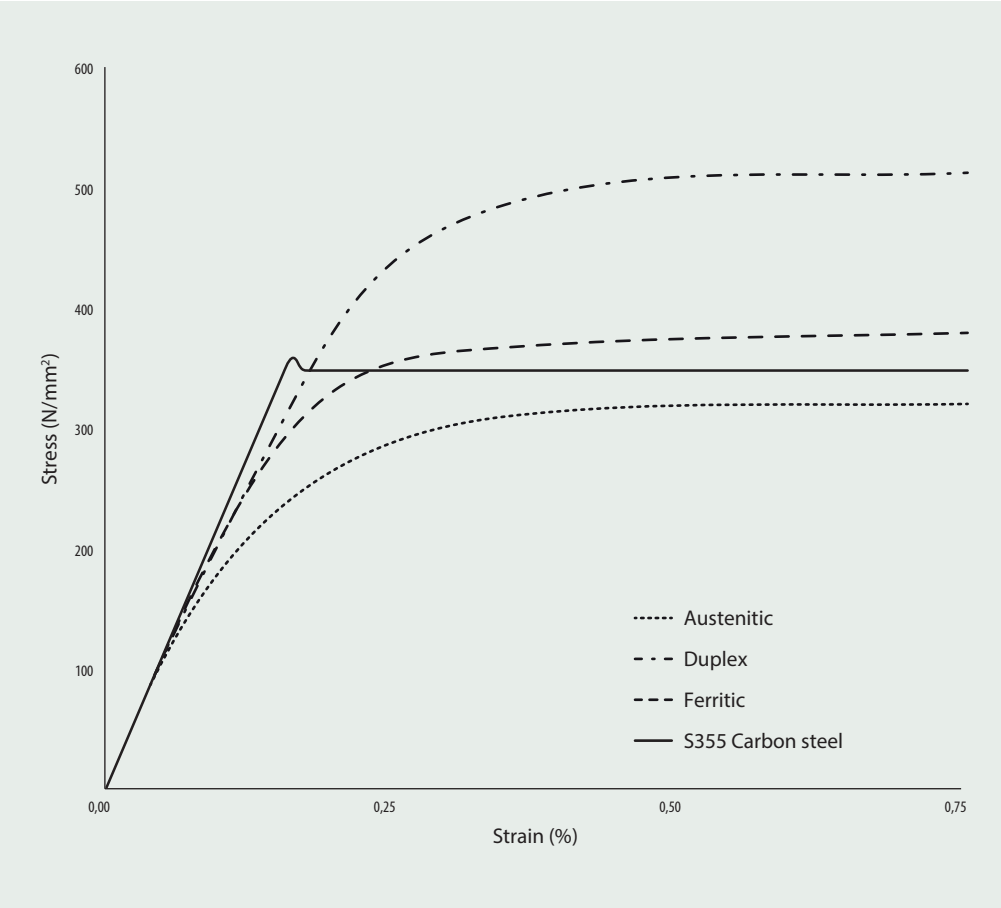

Figure 2.2
Full range stress-strain curves for stainless steel and carbon steel

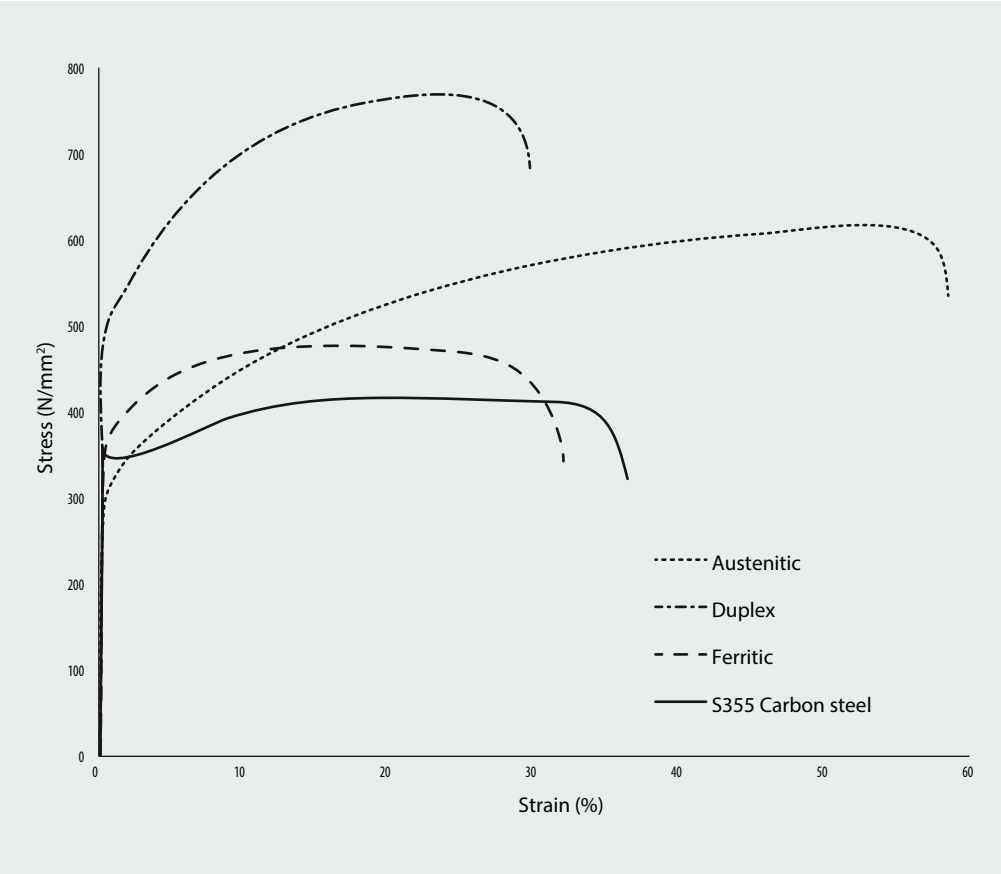

Figure 2.3
Definition of the 0,2% proof strength

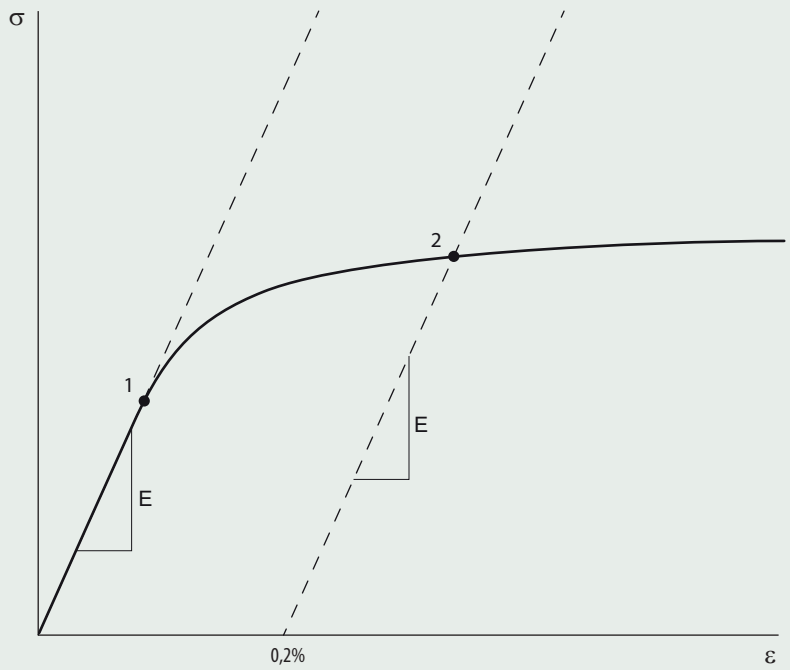

1. Elastic (proportionality) limit
2. 0,2% proof strength

2.2 Factors affecting stress-strain behaviour

Compared to carbon steels, the metallurgy of stainless steels is more complex and the manufacturing process has a higher impact on their final properties.

Certain factors can change the form of the basic stress-strain curve for any given grade of stainless steel and are to some extent independent.

2.2.1 Cold working

Stainless steel is generally available in the “annealed condition”, i.e. it has undergone a heat treatment process in which it was heated up, maintained at that temperature for a time period, and then rapidly quenched. Annealing returns the material to a soft and workable state.

Strength levels of stainless steels, especially the austenitic grades, are enhanced by cold working (such as imparted during cold forming operations including roller levelling/flattening and during fabrication). Associated with this enhancement is a reduction in ductility but this normally is of slight consequence due to the initial high values of ductility, especially for the austenitic stainless steels. It is possible to purchase material in a cold worked condition (see Table 2.3). The price of cold worked stainless steel is slightly higher than the equivalent annealed material, depending on the grade, product form and level of cold working.

As stainless steel is cold worked, it tends to exhibit increasing non-symmetry of tensile and compressive behaviour and anisotropy (different stress-strain characteristics

parallel and transverse to the rolling directions). The degree of asymmetry and anisotropy depends on the grade, level of cold working and manufacturing route. Structural sections of thickness above 3 mm are not made from heavily cold worked material and the differences in stress strain behaviour for such sections due to non symmetry and anisotropy are not large; the non-linearity has a more significant effect. Anisotropy and non-symmetry are more significant in the design of lighter gauge, heavily worked sections.

For cold worked material, the compression strength in the longitudinal direction is less than the tensile strength in both the transverse and longitudinal directions (the values traditionally given in material standards such as EN 10088 and reported accordingly by suppliers). Care is therefore needed in the choice of design strength for cold worked material (see Table 2.3).

During the fabrication of a section by cold forming, plastic deformations occur which result in a significant increase in the 0,2% proof strength. A strength enhancement of about 50% is typical in the cold formed corners of cross sections; the strength of the material in the flat faces also increases. Guidance on how to take advantage of this increased strength arising from fabrication is given in ANNEX B. Alternatively the strength increase can be exploited by testing (see Section 10).

Subsequent heat treatment or welding of the member will have a partial annealing (softening) effect with a consequential reduction in any enhanced strength properties arising from cold working (and a reduction in anisotropy). Section 7.4.4 gives guidance on the design of welded connections between members from cold worked material.

2.2.2 Strain-rate sensitivity

Strain-rate sensitivity is more pronounced in stainless steels than in carbon steels. That is, a proportionally greater strength can be realised at fast strain rates for stainless steel than for carbon steel.

2.3 Relevant standards and design strengths

2.3.1 Flat and long products

The relevant standard is EN 10088, *Stainless steels*. It comprises five parts, of which three are relevant for construction applications:

- Part 1, *Lists of stainless steels*, gives the chemical compositions and reference data on some physical properties such as modulus of elasticity, E.
- Part 4, *Technical delivery conditions for sheet/plate and strip of corrosion resisting steels for construction purposes*, gives the technical properties and chemical compositions for the materials used in forming structural sections.
- Part 5, *Technical delivery conditions for bars, rods, wire, sections and bright products of corrosion resisting steels for construction purposes*, gives the technical properties and chemical compositions for the materials used in long products.

EN 10088-4 and -5 are harmonised product standards and therefore stainless steel specified to this standard must be CE marked. By CE marking the product, the manufacturer declares that it is fit for purpose for its intended use. The CE mark indicates that the product conforms to the relevant standard, meeting any specified threshold values required by that Standard (e.g. minimum thickness or strength) and that the conformity assessment procedures have been complied with.

Designation and composition

The designation systems adopted in EN 10088 are the European steel number and a steel name.

For example, grade 304L has a steel number 1.4307, where:

1.	**43**	**07**
Denotes steel	Denotes one group of stainless steels	Individual grade identification

The groups of stainless steel are denoted in EN 10027-2 as:

1.40XX	Stainless steel with Ni < 2,5 % without Mo, Nb and Ti
1.41XX	Stainless steel with Ni < 2,5 % and Mo but without Nb and Ti
1.43XX	Stainless steel with Ni ≥ 2,5 % but without Mo, Nb and Ti
1.44XX	Stainless steel with Ni ≥ 2,5 %, and Mo but without Nb and Ti
1.45XX	Stainless steels with special additions
1.46XX	Chemical resistant and high temperature Ni grades.

The steel name system provides some understanding of the steel composition. The name of the steel number 1.4307 is X2CrNi18-9, where:

X	**2**	**CrNi**	**18-9**
Denotes high alloy steel	100 x % of carbon	Chemical symbols of main alloying elements	% of main alloying elements

Each stainless steel name has a unique corresponding steel number. ANNEX A gives a table showing the designations for equivalent grades of stainless steel in European and US standards.

The chemical compositions of common stainless steels are given in Table 2.1.

Strength

In design calculations, the characteristic yield strength f_y and characteristic ultimate strength f_u are taken as the minimum specified values for the 0,2% proof strength ($R_{p0,2}$) and tensile strength (R_m) given in EN 10088-4 and 5 (see Table 2.2). These values apply to material in the annealed condition, and hence are conservative for material or sections which have undergone cold working during fabrication. Structural sections are rarely delivered in the annealed condition.

It should be noted that the measured yield strength of austenitic stainless steels may exceed the specified minimum values by a margin varying from 25 to 40%, for plate thicknesses of 25 mm or less. The margin for duplex stainless steels is lower, perhaps from 5 up to 20%. There is an inverse relationship between thickness or diameter, and yield strength; lighter gauges typically have yield strengths that are significantly higher than the minimum requirement whereas at thicknesses of 25 mm and above, the values are usually fairly close to the specified minimum yield strength.

For external, exposed structures in very hot climates, due consideration should be taken of the maximum temperature the stainless steel is likely to reach. While smaller and sheltered components may remain at ambient temperatures, large surface areas of bare stainless steel that are exposed to direct sun can reach temperatures that are about 50% higher than ambient temperature. Resources like www.weatherbase.com can be used to determine historic weather patterns. If the maximum temperature of the stainless steel is likely to reach 60°C, then a 5% reduction should be made to the room temperature yield strength; greater reductions will be necessary for higher temperatures.

Table 2.1
Chemical composition to EN 10088

	Grade	Content of alloying element (maximum or range permitted) weight %				
		C	Cr	Ni	Mo	Others
Austenitic	1.4301	0,07	17,5 – 19,5	8,0 – 10,5	-	-
	1.4307	0,03	17,5 – 19,5	8,0 – 10,5	-	-
	1.4401	0,07	16,5 – 18,5	10,0 – 13,0	2,0 – 2,5	-
	1.4318	0,03	16,5 – 18,5	6,0 - 8,0	-	N: 0,1 – 0,2
	1.4404	0,03	16,5 – 18,5	10,0 – 13,0	2,0 – 2,5	-
	1.4541	0,08	17,0 – 19,0	9,0 – 12,0	-	Ti: 5xC – 0,7 [1]
	1.4571	0,08	16,5 – 18,5	10,5 – 13,5	2,0 – 2,5	Ti: 5xC – 0,7 [1]
Duplex	1.4062	0,03	21,5 – 24,0	1,0 – 2,9	0,45	N: 0,16 – 0,28
	1.4162	0,04	21,0 – 22,0	1,35 – 1,7	0,1 – 0,8	N: 0,2 – 0,25 Cu: 0,1 – 0,8
	1.4362	0,03	22,0 – 24,0	3,5 – 5,5	0,1 – 0,6	N: 0,05 – 0,2 Cu: 0,1 – 0,6
	1.4462	0,03	21,0 – 23,0	4,5 – 6,5	2,5 – 3,5	N: 0,1 – 0,22
	1.4482	0,03	19,5 – 21,5	1,5 – 3,5	0,1 – 0,6	N: 0,05 – 0,2 Cu: 1,0
	1.4662	0,03	23,0 – 25,0	3,0 – 4,5	1,0 – 2,0	N: 0,2 – 0,3 Cu: 0,1 – 0,8
Ferritic	1.4003	0,03	10,5 – 12,5	0,3 – 1,0	-	-
	1.4016	0,08	16,0 – 18,0	-	-	-
	1.4509	0,03	17,5 – 18,5	-	-	Ti: 0,1 – 0,6 Nb: [3xC+0,3] – 1,0
	1.4521	0,025	17,0 – 20,0	-	1,8 – 2,5	Ti: [4x(C+N)+0,15] – 0,8[2]
	1.4621	0,03	20,0 – 21,5	-	-	N: 0,03 Nb: 0,2 – 1,0 Cu: 0,1 – 1,0

Note:

[1] Titanium is added to stabilise carbon and improve corrosion performance in the heat affected zones of welds. However, except for very heavy section construction, the use of titanium stabilised austenitic steels has been superseded largely by the ready availability of the low carbon grades, 1.4307 and 1.4404.

[2] The stabilisation may be achieved with titanium, niobium or zirconium. According to the atomic mass of these elements and the content of carbon and nitrogen the equivalence shall be the following: Nb (% by mass) = Zr (% by mass) = 7/4 Ti (% by mass)

Table 2.2 Nominal values of the yield strength f_y and the ultimate strength f_u for common stainless steels to EN 10088 (N/mm²)

	Grade	Product form							
		Cold rolled strip		Hot rolled strip		Hot rolled plate		Bars, rods & sections	
		Nominal thickness t							
		$t \leq 8$ mm		$t \leq 13{,}5$ mm		$t \leq 75$ mm		t or $\phi \leq 250$ mm	
		f_y	f_u	f_y	f_u	f_y	f_u	f_y	f_u
Austenitic	1.4301	230	540	210	520	210	520	190	500
	1.4307	220	520	200	520	200	500	175	500
	1.4318	350	650	330	650	330	630	-	-
	1.4401	240	530	220	530	220	520	200	500
	1.4404	240	530	220	530	220	520	200	500
	1.4541	220	520	200	520	200	500	190	500
	1.4571	240	540	220	540	220	520	200	500
Duplex	1.4062	530[1]	700[1]	480[2]	680[2]	450	650	380[3]	650[3]
	1.4162	530[1]	700[1]	480[2]	680[2]	450	650	450[3]	650[3]
	1.4362	450	650	400	650	400	630	400[3]	600[3]
	1.4462	500	700	460	700	460	640	450[3]	650[3]
	1.4482	500[1]	700[1]	480[2]	660[2]	450	650	400[3]	650[3]
	1.4662	550[1]	750[1]	550[4]	750[4]	480	680	450[3]	650[3]
Ferritic	1.4003	280	450	280	450	250[5]	450[5]	260[6]	450[6]
	1.4016	260	450	240	450	240[5]	430[5]	240[6]	400[6]
	1.4509	230	430	-	-	-	-	200[7]	420[3]
	1.4521	300	420	280	400	280[8]	420[8]	-	-
	1.4621	230[5]	400[9]	230[8]	400[8]	-	-	240[7]	420[7]

Note:
The nominal values of f_y and f_u given in this table may be used in design without taking special account of anisotropy or strain hardening effects. For ferritic stainless steels, EN 10088-4 gives f_y values in the longitudinal and transvers direction. This table gives the longitudinal values which are generally about 20 N/mm² lower than the transverse values.

1.4621, 1.4482, 1.4062 and 1.4662 are only covered in EN 10088-2 and 3.
1.4509 bar is only covered in EN 10088-3.

[1] $t \leq 6{,}4$ mm
[2] $t \leq 10$ mm
[3] t or $\phi \leq 160$ mm
[4] $t \leq 13$ mm
[5] $t \leq 25$ mm
[6] t or $\phi \leq 100$ mm
[7] t or $\phi \leq 50$ mm
[8] $t \leq 12$ mm
[9] $t \leq 6$ mm

Cold worked steels may be specified in accordance with EN 10088 either in terms of minimum 0,2% proof strength (e.g. cold worked conditions CP350, CP500 etc) or tensile strength (e.g. cold worked conditions C700, C850 etc), but only one parameter can be specified. Since structural design almost always requires a minimum specified value for the yield strength, f_y, EN 1993-1-4 permits design only with stainless steels in the cold worked condition CP350 and CP500 (Table 2.3). The characteristic yield strength f_y is taken as the minimum specified value of 350 N/mm² for material in the CP350 condition. To take into account asymmetry of the cold worked material in those cases where compression in the longitudinal direction is a relevant stress condition (i.e. column behaviour or bending), the characteristic strength value of CP500 material

is reduced from 500 to 460 N/mm² (see Section 2.2). A higher value may be used if supported by appropriate experimental data.

For cold worked levels higher than CP500, design should be by testing according to Section 10.

Rectangular hollow sections are available in material cold worked to intermediate strengths between CP350 and CP500 with the yield and tensile strength guaranteed by the producer (the yield strength being valid in tension and compression).

Table 2.3 Nominal values of the yield strength f_y and the ultimate strength f_u for structural stainless steels to EN 10088 in the cold worked condition

Grade	Cold Worked Condition			
	CP350		CP500	
	f_y N/mm²	f_u [1] N/mm²	f_y N/mm²	f_u [1] N/mm²
1.4301	350	600	460	650
1.4318	[2]	[2]	460	650
1.4541	350	600	460	650
1.4401	350	600	460	650
1.4571	350	600	460	650

Note:
[1] According to EN 10088, the CP classification defines only the required 0,2% proof strength, f_y. The steels used should have declared properties that meet the conservative tabulated values for ultimate strength, f_u, unless type testing is used to demonstrate the acceptability of lower values.
[2] Grade 1.4318 develops a 0,2% proof strength of 350 N/mm² in the annealed condition; see Table 2.2.

Modulus of elasticity

For structural design, it is recommended that a value of 200×10³ N/mm² is used for the modulus of elasticity for all stainless steels.

EN 1993-1-4 and EN 10088-1 give a value of 200×10³ N/mm² for the modulus of elasticity for all the standard austenitic and duplex grades typically used in structural applications. For ferritic grades, a value of 220×10³ N/mm² is given. However, tests on ferritic stainless steels consistently indicate a value of 200×10³ N/mm² is more appropriate and so it is expected that the next revision of EN 1993-1-4 will recommend this value to be used for structural design for all stainless steels.

For estimating deflections, the secant modulus is more appropriate, see Section 6.4.6. A value of 0,3 can be taken for Poisson's ratio and 76,9×10³ N/mm² for the shear modulus, G.

2.3.2 Hollow sections

There are two standards for circular hollow sections made from stainless steel, which give both the technical properties and chemical compositions:

EN 10296-2 *Welded circular steel tubes for mechanical and general engineering purposes. Technical delivery conditions.* Part 2: *Stainless steels*

EN 10297-2 *Seamless circular steel tubes for mechanical and general engineering purposes. Technical delivery conditions. Part 2: Stainless steel*

There is no equivalent standard for stainless steel rectangular hollow sections.

A European standard covering stainless steel structural hollow sections (rectangular and circular) for construction purposes is being prepared. Until it is available, when specifying structural hollow sections for construction purposes, it is customary to specify EN 10088 for composition and strength and the relevant standard for carbon steel rectangular hollow sections for tolerances.

2.3.3 Bolts

Stainless steel bolts are covered by EN ISO 3506, *Corrosion-resistant stainless steel fasteners*. The information below relates to the revision of EN ISO 3506 which is due to be published in 2017. The specification gives chemical compositions and mechanical properties for austenitic, martensitic, ferritic and duplex fasteners. Alternative materials not specifically covered in the specification are permitted if they meet the physical and mechanical property requirements and have equivalent corrosion resistance.

In EN ISO 3506, bolt and nut materials are classified by a letter: “A” for austenitic, “F” for ferritic, “C” for martensitic and “D” for duplex. It is recommended that austenitic or duplex bolts are used in structural applications. The letter is followed by a number (1, 2, 3, 4, 5, 6 or 8) which reflects the corrosion resistance; 1 representing the least durable and 8 the most durable. Table 2.4 gives the chemical composition range for the austenitic and duplex classes of bolts and Table 2.5 gives the common designations of stainless steels used for fasteners of each class.

Table 2.4
Chemical composition of bolts to EN ISO 3506

	Grade	Chemical Composition[a] Weight %										Other Elements and Notes
		C	Si	Mn	P	S	Cr	Mo	Ni	Cu	N	
Austenitic	**A1**	0,12	1,0	6,5	0,020	0,15-0,35	16-19	0,7	5-10	1,75-2,25	—	[b, c, d]
Austenitic	**A2**	0,10	1,0	2,0	0,050	0,03	15-20	— [e]	8-19	4	—	[f, g]
Austenitic	**A3**	0,08	1,0	2,0	0,045	0,03	17-19	— [e]	9-12	1	—	5C ≤ Ti ≤ 0,8 and/or 10C ≤ Nb ≤ 1,0
Austenitic	**A4**	0,08	1,0	2,0	0,045	0,03	16-18,5	2,0-3,0	10-15	4	—	[g, h]
Austenitic	**A5**	0,08	1,0	2,0	0,045	0,03	16-18,5	2,0-3,0	10,5-14	1	—	5C ≤ Ti ≤ 0,8 and/or 10C ≤ Nb ≤ 1,0[h]
Austenitic	**A8**	0,03	1,0	2,0	0,040	0,03	19-22	6,0-7,0	17,5-26	1,5	—	—
Duplex	**D2**	0,04	1,0	6,0	0,040	0,030	19-24	0,10-1,0	1,5-5,5	3	0,05-0,20	Cr+3,3 Mo+16N ≤ 24[j]
Duplex	**D4**	0,04	1,0	6,0	0,040	0,030	21-25	0,10-2,0	1,0-5,5	3	0,05-0,30	24 < Cr +3,3Mo +16N[j]
Duplex	**D6**	0,03	1,0	2,0	0,040	0,015	21-26	2,5-3,5	4,5-7,5	—	0,08-0,35	—
Duplex	**D8**	0,03	1,0	2,0	0,035	0,015	24-26	3,0-4,5	6,0-8,0	2,5	0,20-0,35	W ≤ 1,0

[a] Values are maximum unless otherwise indicated.
[b] Selenium might be used to replace sulphur, however National regulations shall be taken into account in the countries or regions concerned.
[c] If the nickel content is below 8%, the minimum manganese content shall be 5%.
[d] There is no minimum limit to the copper content provided that the nickel content is greater than 8%.
[e] Molybdenum may be present at the discretion of the manufacturer. However, if for some applications limiting of the molybdenum content is essential, this shall be stated at the time of ordering by the purchaser.
[f] If the chromium content is below 17%, the minimum nickel content should be 12%.
[g] For austenitic stainless steels having a maximum carbon content of 0,030%, nitrogen may be present but shall not exceed 0,22%.
[h] At the discretion of the manufacturer the carbon content may be higher where required in order to obtain the specified mechanical properties at larger diameters, but shall not exceed 0,12% for austenitic steels.
[j] This formula is used for the purpose of classification of duplex steels in accordance with this standard; it is not intended to be used as a selection criterion for corrosion resistance.

Table 2.5
Common designations of stainless steels used for fasteners

Type	ISO 3506 class	Common designations of stainless steels used for fasteners	Comments
Austenitic	A1	1.4570, 1.4305	Designed for machining [1]
	A2	1.4301, 1.4307	Basic austenitic
	A3	1.4541, 1.4550	Stabilised basic austenitic
	A4	1.4401, 1.4404	Molybdenum containing austenitic
	A5	1.4571	Stabilised molybdenum austenitic
	A8	1.4529, 1.4547	Super austenitic
Duplex	D2	1.4482, 1.4362	Lean duplex
	D4	1.4162, 1.4062	Lean duplex
	D6	1.4462	Standard duplex
	D8	1.4410, 1.4501, 1.4507	Super duplex

[1] *The high sulphur content lowers resistance to corrosion compared to corresponding steels with normal sulphur content. Only specify with care.*

Figure 2.4 shows the designation system and strength levels (property classes) available for austenitic and duplex fasteners. The different mechanical properties are usually achieved by work hardening and depend on the rate of cold working. Table 2.6 gives the mechanical properties of each property class. Austenitic bolts manufactured to property class 50 will be non-magnetic, but those in higher property classes may demonstrate some magnetic properties.

Figure 2.4
Designation system for stainless steel grades and property classes for fasteners

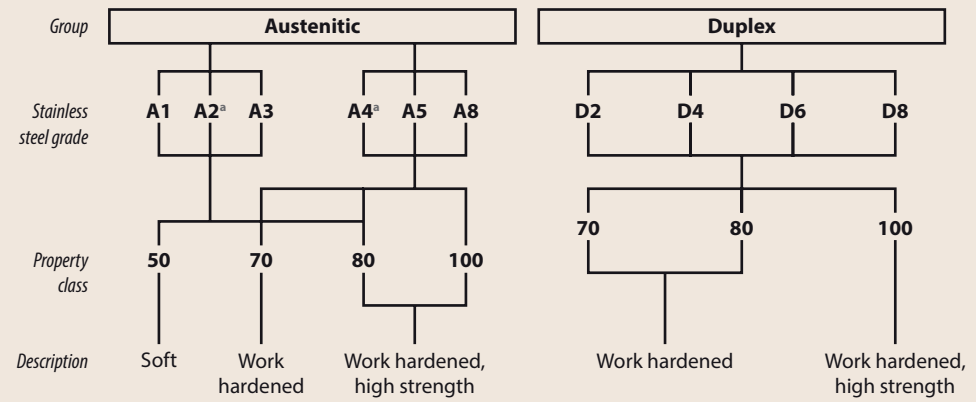

a Low carbon austenitic stainless steels with carbon content not exceeding 0,030% may additionally be marked with an "L" after the grade. Example: A4L–80.

The condition of the alloy in property class 50 bolts is soft. Property class 70 fasteners are made from cold drawn bar. Property class 80 fasteners are made from severely hard cold drawn bar. The cold working of the bar may have a slight effect on corrosion resistance. Property class 50 bolts having machined threads are likely to be more prone to thread galling, see Section 11.7.

The corrosion resistance of a stainless steel fastener should be at least equivalent to the material being joined, i.e. grade A2 bolts (or better) can be used to join grade 1.4301 material but grade A4 bolts (or better) should be used to join grade 1.4401 material.

For calculating the resistance of a bolt under tension or shear or combined tension and shear, the basic strength f_{ub} should be taken as the specified minimum tensile strength R_m given in Table 2.6 for the appropriate property class.

Hydrogen embrittlement is not encountered in austenitic stainless steels, nor with duplex steels which are produced and used in accordance with standard quality control measures. On the few occasions where this phenomenon has occurred with duplex steels, it was associated either with poor production control or unusual service exposure conditions. The risk of hydrogen embrittlement should be assessed for high strength components such as bolts with strength greater than property class 80.

Table 2.6 Minimum specified mechanical properties for bolts, screws and studs from austenitic and duplex steel grades

Stainless steel group	Stainless steel grade	Property class	Tensile strength, R_m (MPa)	Stress at 0,2 % non-proportional elongation, R_{pf} (MPa)	Elongation after fracture mm
Austenitic	A1, A2, A3, A5	50	500	210	0,6 d
		70	700	450	0,4 d
		80	800	600	0,3 d
	A4	50	500	210	0,6 d
		70	700	450	0,4 d
		80	800	600	0,3 d
		100	1000	800	0,2 d
	A8	70	700	450	0,4 d
		80	800	600	0,3 d
		100	1000	800	0,2 d
Duplex	D2, D4, D6, D8	70	700	450	0,4 d
		80	800	600	0,3 d
		100	1000	800	0,2 d

2.3.4 Fracture toughness

Austenitic stainless steels do not exhibit a ductile to brittle transition; their toughness gradually reduces with decreasing temperature. They are commonly used for cryogenic applications. They demonstrate adequate toughness at service temperatures down to -40 °C.

Duplex and ferritic stainless steels exhibit a ductile to brittle transition. Lean duplexes demonstrate adequate toughness at service temperatures down to -40 °C. The more highly alloyed duplex grades like 1.4462 show even better toughness than this.

Test data indicate that ferritic grades remain ductile at the minimum service temperatures encountered in internal environments. Grade 1.4003 has a modified microstructure which leads to significantly greater toughness properties than the other ferritic grades; it is likely to be the most suitable grade for structural applications in thicker sections. It is not recommended that grade 1.4016 is used in thicknesses above 3 mm for applications where the service temperature is likely to fall below 0 °C.

For grades 1.4509, 1.4521 and 1.4621, the maximum recommended thickness is 2 mm for sub-zero temperatures.

There is no evidence that suggests through-thickness lamellar tearing occurs in stainless steels.

2.4 Physical properties

Table 2.7 gives the room temperature physical properties in the annealed condition of the grades covered in this Design Manual. Physical properties may vary slightly with product form and size but such variations are usually not of critical importance to the application.

Table 2.7 Room temperature physical properties, annealed condition

Group	Grade	Density (kg/m^3)	Thermal expansion 20 – 100°C (10^{-6}/°C)	Thermal conductivity (W/m°C)	Specific thermal capacity (J/kg°C)
Austenitic	1.4301	7900	16	15	500
	1.4307	7900	16	15	500
	1.4401	8000	16	15	500
	1.4318	7900	16	15	500
	1.4404	8000	16	15	500
	1.4541	7900	16	15	500
	1.4571	8000	16,5	15	500
Duplex	1.4062	7800	13	15	480
	1.4162	7700	13	15	500
	1.4362	7800	13	15	500
	1.4482	7800	13	13	500
	1.4462	7800	13	15	500
	1.4662	7700	13	15	500
Ferritic	1.4003	7700	10,4	25	430
	1.4016	7700	10	25	460
	1.4509	7700	10	25	460
	1.4521	7700	10,4	23	430
	1.4621	7700	10	21	460
Carbon steel	S355	7850	12	53	440

Note that the coefficient of thermal expansion for austenitic stainless steels is about 30% higher than that for carbon steel. Where carbon steel and austenitic stainless steel are used together, the effects of differential thermal expansion should be considered in design. The thermal conductivity of austenitic and duplex stainless steels is about 30% of that of carbon steel. Ferritic grades have higher thermal conductivity, which is about 50% of the value for carbon steel. The thermal expansion of ferritic grades is much lower than that of the austenitic grades and approximately equal to that of carbon steels.

Duplex and ferritic grades are magnetic, whereas annealed austenitic stainless steels are essentially not magnetic. In cases where extremely low magnetic permeability is needed, specialist austenitic grades are available and care must be exercised in selecting appropriate welding consumables to eliminate the ferrite content in the weldment. These filler materials give 100% austenitic solidification in the weld metal. Heavy cold working, particularly of the lean alloyed austenitic steels, can also increase magnetic permeability; subsequent annealing would restore the non-magnetic properties.

2.5 Effects of temperature

Austenitic grades are used for cryogenic applications. At the other end of the temperature scale, austenitic grades retain a higher proportion of their strength above about 550°C than carbon steel. However, the design of structures subject to long term exposure at cryogenic temperatures or to long term exposure at high temperatures is outside the scope of this Design Manual. Suffice it to say that other mechanical properties and types of corrosion than those considered in Section 3 take on a greater significance. Other stainless steels than those given here are in most cases better suited for high temperature applications and further advice should be sought.

Duplex steels should not be used for long periods at temperatures above 250 - 300°C, due to the possibility of embrittlement.

Section 8 covers fire resistant design and gives mechanical and physical properties at high temperatures.

2.6 Galvanizing and contact with molten zinc

Hot-dip galvanizing of components made of stainless steel is not allowed because contact with molten zinc can cause embrittlement of the stainless steel. Precautions should be taken to ensure that in the event of a fire, molten zinc from galvanised steel cannot drip or run onto the stainless steel and cause embrittlement. Additionally, there is a risk of embrittlement if a stainless steel component is joined to a carbon steel component which subsequently undergoes hot-dip galvanizing.

2.7 Availability of product forms

2.7.1 General types of product form

Sheet, plate and bar products are all widely available in the grades of stainless steel considered in this Design Manual. The ferritic grades are generally available only in thicknesses up to about 4 mm.

Tubular products are available in austenitic grades and some duplex grades such as 1.4462 and 1.4162. Tubular sections are widely available in the standard ferritic grades 1.4003 and 1.4016. Cold formed (roll formed) tubular products are generally used

for structural applications, but hot finished products are also available. Rectangular hollow sections may also be made by welding together two press braked channel sections.

Open sections are generally produced by cold forming, welding (arc or laser) or extrusion. A range of angles, channels, I-sections and tees are available in dimensions which match the standard carbon steel section sizes (e.g. IPEs, IPNs etc); the smaller sizes are hot rolled and the larger sizes welded. These are available in standard austenitic grades 1.4301 and 1.4401; duplex grades usually require special orders. The hot rolled sections are only available in grades 1.4301 and 1.4401.

Standard section sizes for tubular and open sections are given in the online design software and apps for mobile devices (available from www.steel-stainless.org/designmanual).

Material in the cold worked condition is available in the standard austenitic grades in various product forms including plate, sheet, coil, strip, bars and hollow sections:

- plate, sheet, coil, strip (in thicknesses typically ≤ 6,0 mm)
- round bar (diameters from 5 mm to 60 mm)
- rectangular hollow sections (cross-section dimensions up to 400 mm, thicknesses from 1,2 to 12 mm).

2.7.2 Cold forming

It is important that early discussion with potential fabricators takes place to ascertain cold forming limits for heavier gauge hot rolled stainless steel plate. Stainless steels require higher forming loads than carbon steels and have different spring-back properties. The length of press braked cold formed sections is necessarily limited by the size of machine or by power capability in the case of thicker or stronger materials. Duplex grades require approximately twice the forming loads used for the austenitic materials and consequently the possible range of duplex sections is more limited, however, their higher strength facilitates the use of thinner sections. Furthermore, because of the lower ductility in the duplex material, more generous bending radii should be used. Lighter walled hollow sections are often produced by roll forming and welding. Hot rolled austenitic plate up to about 13 mm can be cold rolled to form structural sections, such as angles. Further information may be found in Section 11.5.2.

2.7.3 Hot rolling

Stainless steel plates too thick for cold forming are heated and rolled into their final shape. This method is generally most cost effective for larger production runs. A wide range of plate thicknesses and widths is used to produce medium to large structural components. Angles and channels are commonly produced using this technique. This technique may be combined with welding to create structural sections. For example, welding two channels together produces I-shaped members. Heavier walled hollow structural sections are often produced by hot rolling and welding.

2.7.4 Extrusion

Hot finished stainless steel extrusions are produced from bar. If the shape required is not common, a larger production run may be necessary to justify the die cost. The maximum size varies with the producer but must fit within a 330 mm circle. Sections are generally provided in lengths of up to 10 m. In addition to standard structural shapes, extrusion is capable of producing a wide range of custom shapes that might otherwise require machining or a custom welded fabrication. Suppliers should be contacted regarding minimum section thicknesses and corner radii.

2.7.5 Welded plate

Welded plate fabrications are typically used when small quantities of a custom shape are required, sharper bends or non-tapered legs are preferred, or the component is quite large. When a project requires small quantities of very large or unusually shaped structural components, experienced stainless steel fabricators often fabricate them by welding together plate using the standard approved methods.

Laser welded or fused angles, beams, channels, tees and hollow sections are increasingly being stocked by service centres in common sizes. Angles, beams and channels of up to 400 mm depth may be found in austenitic stainless steels. Larger sections and duplex stainless steel sections can also be produced.

2.7.6 Surface finish

In certain applications, surface finish and appearance uniformity are important for corrosion performance, aesthetics or surface cleanability. EN 10088-4 and -5 specify a range of standard surface finishes, from dull mill finishes through to bright polishes. Each finish is designated by a number (1 for hot rolled finishes and 2 for cold rolled finishes) followed by a letter. Thicker walled structural open sections generally come with a 1D finish (hot rolled, heat treated and pickled[1]). For architectural applications, cold rolled surfaces are usually chosen because they are smoother than hot rolled finishes, for example a 2B finish (cold rolled, heat treated, pickled and skin passed) is a standard cost-effective mill finish. Other customised surface finishes specifically designed for consistency of appearance in architectural use are also available. It should be noted that variability in processing introduces differences in appearance between manufacturers and even from a single producer, so suppliers must be made aware of finish matching requirements. It is recommended that the purchaser and supplier agree on a reference sample. Bright finishes make any surface unevenness more apparent. Duller finishes always look flatter. There is inherently a minor variation in the natural silver colour of different stainless steel groups (austenitic, duplex, ferritic) which should be considered during design.

[1] Pickling is the removal of a thin layer of metal from the surface of the stainless steel, usually by applying a mixture of nitric and hydrofluoric acid. Alternative, less aggressive compounds are also available from specialised suppliers.

2.7.7 Bolts

Austenitic bolts to EN ISO 3506 property class 70 are the most widely available. Reference should be made to EN ISO 3506 for certain size and length restrictions. It is possible to have “specials” made to order and indeed, this sometimes produces an economical solution.

Bolts can be produced by a number of techniques, e.g. machining, cold rolling and forging. Rolled threads are stronger than machined threads because of the strain hardening which occurs during rolling. The compressive stresses at the surface of rolled threads improves resistance to fatigue corrosion and, in some cases, stress corrosion cracking (SCC). Rolled threads also have greater resistance to thread galling. Thread rolling is the most common method of producing bolts and screws, especially for large volume production of common sizes. For larger bolts (say from M36 upwards), and especially for the stronger duplex bolts, threads are more likely to be cut.

2.8 Life cycle costing and environmental impact

There is increasing awareness that life cycle (or whole life) costs, not just initial costs, should be considered when selecting materials. Experience shows that using a corrosion resistant material in order to avoid future maintenance, downtime and replacement can be a more cost-effective solution, even though the initial material costs are higher. Life cycle costs take account of:

- initial costs,
- maintenance costs,
- diversion from landfills and recycled content,
- service life and environment.

The initial raw material cost of a structural stainless steel product is considerably higher than that of an equivalent carbon steel product, depending on the grade of stainless steel. However, there can be initial cost savings associated with eliminating corrosion resistant coatings. Utilising high strength stainless steels may reduce material requirements by decreasing section size and overall structure weight which cuts initial costs. Additionally, eliminating the need for coating maintenance or component replacement due to corrosion can lead to significant long-term maintenance cost savings.

The excellent corrosion resistance of stainless steel offers reduced inspection frequency and costs, reduced maintenance costs and long service life.

Stainless steel has a high residual scrap value (i.e. value at the end of a structure’s life), though this is rarely a deciding factor for a structure with a long projected life (for instance over 50 years). However, because of the high residual scrap value, scrap is diverted from landfills and recycled into new metal and end-of-life (EOL) recycling rates are very high. Stainless steel producers use as much scrap as is

available, but the material's overall average 20 to 30 year service life limits scrap availability. Typical recycled content for all types of stainless steel is at least 60%. Stainless steel is 100% recyclable and can be indefinitely recycled into new high quality stainless steel.

Life cycle costing uses the standard accountancy principle of discounted cash flow to reduce all those costs to present day values. The discount rate encompasses inflation, bank interest rates, taxes and, possibly, a risk factor. This allows a realistic comparison to be made of the options available and the potential long term benefits of using stainless steel to be assessed against other material selections.

DURABILITY AND SELECTION OF MATERIALS

3.1 Introduction

Stainless steels are generally very corrosion resistant and will perform satisfactorily in most environments. The limit of corrosion resistance of a given stainless steel is predominantly dependent on its constituent elements, which means that each grade has a slightly different response when exposed to a corrosive environment. Care is therefore needed to select the most appropriate grade of stainless steel for a given application. Generally, the higher the level of corrosion resistance required, the greater the cost of the material. For example, grade 1.4401 steel costs more than grade 1.4301 because of the addition of molybdenum. Duplex stainless steels potentially offer increased corrosion resistance with less of a price premium. Furthermore, their higher strength may make it possible to reduce section sizes and, therefore, material cost.

Austenitic material in the cold worked condition has a similar corrosion resistance to that in the annealed condition.

The most common reasons for a metal to fail to perform as well as expected regarding corrosion resistance are:

- incorrect assessment of the environment or exposure to unexpected conditions, e.g. unsuspected contamination by chloride ions or higher than expected surface accumulations,
- inappropriate stainless steel fabrication techniques (e.g. welding, heat treating and heating during forming), incomplete weld heat tint removal, or surface contamination may increase susceptibility to corrosion,
- too rough or incorrectly orientated finish.

Even when surface staining or corrosion occur, it is unlikely that structural integrity will be compromised. However, the user may still regard unsightly rust staining on external surfaces as a failure. As well as careful material grade selection, good detailing and workmanship can significantly reduce the likelihood of staining and corrosion; practical guidance is given in Section 11. Experience indicates that any serious corrosion problem is most likely to show up in the first two or three years of service.

In certain aggressive environments, some grades of stainless steel will be susceptible to localised attack. Six mechanisms are described in the next section although the last three are very rarely encountered in buildings.

It should be emphasised that the presence of moisture (including that due to condensation) is necessary for corrosion to occur.

3.2 Types of corrosion and performance of steel grades

3.2.1 Pitting corrosion

As the name implies, pitting takes the form of localised pits. It occurs as a result of local breakdown of the passive layer, normally by chloride ions although the other halides and other anions can have a similar effect. In a developing pit, corrosion products may create a very corrosive solution, often leading to high propagation rates. In most structural applications, the extent of pitting is likely to be superficial and the reduction in section of a component is negligible. However, corrosion products can stain architectural features. A less tolerant view of pitting should be adopted for services such as ducts, piping and containment structures.

Since the chloride ion is by far the most common cause of pitting in exterior applications, coastal areas and environments laden with de-icing salts are rather aggressive. In addition to chloride content, the probability of a service environment causing pitting depends on factors such as the temperature, corrosive pollutants and particulate, acidity or alkalinity, the content of oxidizing agents, and the presence or absence of oxygen. The pitting resistance of a stainless steel is dependent on its chemical composition. Chromium, molybdenum and nitrogen all enhance the resistance to pitting.

The Pitting Resistance Equivalent (PRE) gives an approximate empirically derived estimate of pitting resistance and is defined as:

$$PRE = \%\ wt\ Cr + 3{,}3(\%\ wt\ Mo) + 16(\%\ wt\ N)$$

The PRE of a stainless steel is a useful guide to its corrosion resistance relative to other stainless steels, but should only be used as a rough indicator. Small differences in PRE can easily be overshadowed by other factors that also influence corrosion pitting resistance. Therefore the PRE should not be the only factor in selection.

Grade 1.4301 has the lowest PRE of the austenitic grades covered in this Design Manual. It exhibits surface corrosion in applications with low to moderate coastal or de-icing salt exposure and is unsuitable for environments with spray/mist, splashing and immersion. Grade 1.4301 may also show unacceptable levels of pitting in industrial atmospheres.

For low to moderate exposure to industrial pollution, or coastal or de-icing chloride salts, 1.4401 or duplex 1.4362 or 1.4162 are preferred. When pollution or salt exposure is higher, duplex 1.4462 or even more corrosion-resistant stainless steels are generally an option.

3.2.2 Crevice corrosion

Crevice corrosion occurs in tight, unsealed crevices where there is a continuous film of water both within and outside the crevice. The crevice must be fine enough to allow entry of water and dissolved chloride yet prevent diffusion of oxygen into the crevice.

Crevice corrosion can be avoided by sealing crevices or eliminating them. The severity of a crevice is very dependent on its geometry: the narrower and deeper the crevice, the more severe the corrosion conditions.

Joints that are not submerged should be designed to shed moisture. Some stainless steels, including 1.4301 and 1.4401, are susceptible to crevice corrosion when chlorides or salts are present in the environment. More corrosion resistant austenitic and the duplex steels are less susceptible and performance will be dependent on the conditions, especially the temperature.

The severity of corrosion in submerged crevices is generally worse than in corrosive above-water atmospheric environments that have wetting and drying cycles, or are regularly slightly moist. Submerged tight crevices are more aggressive because the diffusion of oxidants necessary for maintaining the passive film is restricted.

Crevices may result from a metal to metal joint, a gasket, biofouling, surface deposits (e.g. particulate, leaves, food, debris), and surface damage such as embedded iron. Every effort should be made to eliminate crevices, but it is often not possible to eliminate them entirely.

As in pitting corrosion, the alloying elements chromium, molybdenum and nitrogen enhance the resistance to attack and thus the resistance to crevice corrosion increases from grade 1.4301 through 1.4401 to 1.4462.

3.2.3 Bimetallic (galvanic) corrosion

When two dissimilar metals are in electrical contact and are bridged by an electrolyte (i.e. an electrically conducting liquid such as sea water or impure fresh water), a current flows from the anodic metal to the cathodic or nobler metal through the electrolyte. As a result the less noble metal corrodes.

Stainless steels usually form the cathode in a galvanic couple and therefore do not suffer additional corrosion. Stainless steels and copper alloys are very close in the galvanic series, and when exposed to moderate atmospheric conditions can generally be placed in direct contact without concern.

This form of corrosion is particularly relevant when considering joining stainless steel and carbon or low alloy steels, weathering steel, or aluminium. It is important to ensure the filler metal is at least as noble as the most corrosion-resistant material (usually stainless steel). Likewise, if connected with fasteners, the bolting material should be equivalent to the most corrosion-resistant metal. Galvanic corrosion between different types of stainless steel is hardly ever a concern, and then, only under fully immersed conditions.

Bimetallic corrosion can be prevented by eliminating current flow by:

- insulating dissimilar metals, i.e. breaking the metallic path (see Section 7.1.1),
- preventing electrolyte bridging, i.e. breaking the electrolytic path by paint or other coating. Where protection is sought by this means and it is impracticable to coat both metals, then it is preferable to coat the more noble one (i.e. stainless steel in the case of a stainless/carbon steel connection).

The risk of deep corrosion attack is greatest if the area of the more noble metal (i.e. stainless steel) is large compared with the area of the less noble metal (i.e. carbon steel). Special attention should be paid to the use of paints or other coatings on the carbon steel. If there are any small pores or pinholes in the coating, the small area of bare carbon steel provides a very large cathode/anode area ratio, and severe pitting of the carbon steel may occur. This is, of course, likely to be most severe under immersed conditions. In these situations, it is preferable to paint the stainless steel also up to a distance of at least 75 mm away from where the metals are in contact so that any pores lead to small area ratios.

Adverse area ratios are likely to occur with fasteners and at joints. Carbon steel bolts in stainless steel members should be avoided because the ratio of the area of the stainless steel to the carbon steel is large and the bolts will be subject to aggressive attack. Conversely, the rate of attack on a carbon steel or aluminium member by a stainless steel bolt is negligible. It is usually helpful to draw on previous experience in similar sites because dissimilar metals can often be safely coupled under conditions of occasional condensation or dampness with no adverse effects, especially when the conductivity of the electrolyte is low.

The prediction of these effects is difficult because the corrosion rate is determined by a number of complex variables. The use of electrical potential tables ignores the presence of surface oxide films and the effects of area ratios and different solution (electrolyte) chemical compositions. Therefore, uninformed use of these tables may produce erroneous results. They should be used with care and only for initial assessment.

The general behaviour of metals in bimetallic contact in rural, urban, industrial and coastal environments is fully documented in BS PD 6484 *Commentary on corrosion at bimetallic contacts and its alleviation*.

3.2.4 Stress corrosion cracking

The development of stress corrosion cracking (SCC) requires the simultaneous presence of tensile stresses and specific environmental factors unlikely to be encountered in normal building atmospheres. The stresses do not need to be very high in relation to the proof stress of the material and may be due to loading, residual effects from manufacturing processes such as welding, or bending. Ferritic stainless steels are not susceptible to SCC. Duplex stainless steels usually have superior

resistance to stress corrosion cracking than the austenitic stainless steels covered in this Design Manual. Higher alloy austenitic stainless steels such as grades 1.4539, 1.4529, 1.4547 and 1.4565 have been developed for applications where SCC is a corrosion hazard.

Caution should be exercised when stainless steel members containing high residual stresses (e.g. due to cold working) are used in chloride rich environments (e.g. indoor swimming pools, marine, offshore). Highly loaded cables in chloride-rich environments may be susceptible to SCC, depending on the grade of stainless steel.

Section 3.5.3 gives guidance on grade selection for swimming pool environments to avoid SCC.

3.2.5 General (uniform) corrosion

Under normal conditions typically encountered in structural applications, stainless steels do not suffer from the general loss of section that is characteristic of corrosion in non-alloyed irons and steels.

3.2.6 Intergranular corrosion (sensitisation) and weld decay

When austenitic stainless steels are subject to prolonged heating in the range 450°C to 850°C, the carbon in the steel diffuses to the grain boundaries and precipitates chromium carbide. This removes chromium from the solid solution and leaves a lower chromium content adjacent to the grain boundaries. Steel in this condition is termed “sensitized”. The grain boundaries become prone to preferential attack on subsequent exposure to a corrosive environment. This phenomenon is known as “weld decay” when it occurs in the heat affected zone of a weldment.

There are three ways to avoid intergranular corrosion:

- use steel having a low carbon content,
- use steel stabilised with titanium or niobium (e.g. 1.4541, 1.4571, 1.4509, 1.4521 or 1.4621), because these elements combine preferentially with carbon to form stable particles, thereby reducing the risk of forming chromium carbide,
- use heat treatment, however this method is rarely used in practice.

Regarding austenitic or duplex stainless steels, a low carbon content (0,03% maximum) stainless steel should be specified when welding sections to avoid sensitisation and intergranular corrosion. Intergranular corrosion is now very uncommon in austenitic or duplex stainless steels because modern steel making practice ensures low carbon contents and thus avoids the problem.

Ferritic stainless steels are more prone to sensitization due to welding than austenitic stainless steels. Therefore, even with a low carbon content, it is still important to use a stabilized ferritic grade for welded sections.

3.3 Corrosion in selected environments

3.3.1 Air

Atmospheric environments vary, as do their effect on stainless steels. Rural atmospheres, uncontaminated by industrial pollutants or coastal salt, are very mild in terms of corrosivity, even in areas of high humidity. Industrial de-icing salt and coastal atmospheres are considerably more severe. Section 3.5 should be referred to for guidance on selecting suitable types of stainless steel.

The most common causes of atmospheric corrosion are surface contamination with metallic iron particles, arising from fabrication operations either in the workshop or at site, and chlorides originating from the sea, de-icing salts, industrial pollution and chemicals (e.g. bleach and hydrochloric acid). Some deposited particles (dust, sand, vegetation or debris), although inert, create crevices and are able to absorb salts, chemicals, and weak acid solutions from acid rain. Since they also retain moisture for longer periods of time, the result can be a more corrosive local environment.

The surface finish has a significant effect on the general appearance of exposed stainless steel (e.g. dirt accumulation), the effectiveness of rain cleaning, and corrosion rates (smoother finishes have better corrosion resistance).

3.3.2 Sea water

Sea water, including brackish water, contains high concentrations of chloride and hence is corrosive. Severe pitting of grades 1.4301 and 1.4401 can occur. Also, these grades can suffer attack at crevices, whether these result from design details or from fouling organisms such as barnacles.

In some applications, duplex 1.4462 may be suitable where corrosion can be tolerated, if the expected service life is defined and components will be inspected. For longer term installations, super austenitic, super ferritic, or super duplex grades should be specified. (These steels contain higher levels of elements such as chromium, nickel, molybdenum, copper and nitrogen. They exhibit a level of corrosion resistance that makes them suitable for subsea and concentrated acid service. Typical super austenitic grades are 1.4565, 1.4529 and 1.4547 and typical super duplex grades are 1.4410, 1.4501 and 1.4507.)

Regular salt spray or splashing may cause as much attack as complete immersion because the surface chloride concentration is raised by the evaporation of water. It should be noted that high chloride concentration run-off water from de-icing salt can cause similar corrosion problems in storm drain components.

The possibility of severe bimetallic corrosion must be considered if stainless steel is used with other metals in the presence of sea water.

3.3.3 Other waters

Standard austenitic and duplex stainless steels usually perform satisfactorily in distilled, tap and boiler waters. If the pH level of the water is less than 4, specialist advice on grade selection should be sought.

Untreated river or lake water, and water used in industrial processing, can sometimes be very corrosive. A full water chemical composition analysis should be obtained including pH level, solids content and type, and chloride level. The typical temperature range, type of biological or microbiological activity, and the concentration and nature of corrosive chemicals are also relevant. If the water does not meet drinking water quality standards, specialist advice on grade selection should be sought.

The possibility of erosion corrosion should be considered for waters containing abrasive particles.

3.3.4 Chemical environments

As stainless steel is resistant to many chemicals, it is often used for their containment. The range of application of stainless steel in chemical environments is wide and it is not appropriate here to cover this subject in detail. Chemical environments are outside the scope of the grade selection guidance given in EN 1993-1-4. It should be noted, however, that in many applications, steels other than those considered in this Design Manual may be more suitable. The advice of a specialist corrosion engineer should be sought.

Charts published by manufacturers showing results of corrosion tests in various chemicals require careful interpretation. Although giving a guide to the resistance of a particular grade, service conditions (temperatures, pressures, concentrations, etc.) vary and will generally differ from the test conditions. Also, the effect of impurities and the degree of aeration can have a marked effect on results.

3.3.5 Soils

Soils differ in their corrosiveness depending on moisture level, pH, aeration, presence of chemical contamination, microbiological activity and surface drainage. Stainless steels generally perform well in a variety of soils and especially well in soils with high resistivity, although some pitting can occur in low resistivity, moist soils. The presence of aggressive chemical species such as chloride ions as well as types of bacteria and stray current (caused by local direct current electric transportation systems such as railways or tram systems) can cause localised corrosion. The development of stray current can be suppressed with a proper electrical insulation of the pipe (coatings or wrappings) and/or cathodic protection.

For grade selection purposes, it is recommended to consider the corrosion resistance of buried stainless steel firstly in relation to the presence of chloride ions and secondly according to the soil resistivity and pH, assuming poorly drained soils in all cases. Table 3.1 recommends suitable grades for different soil conditions.

Table 3.1
Stainless steel grades for use in different soil conditions

Typical location	Soil condition		Grade of stainless steel
Inland	Cl	< 500 ppm	1.4301, 1.4307 1.4401, 1.4404
	Resistivity	> 1000 ohm.cm	
	pH	> 4,5	
Chlorides (coastal/de-icing salt) non-tidal zone	Cl	< 1500 ppm	1.4401, 1.4404
	Resistivity	> 1000 ohm.cm	
	pH	> 4,5	
Chlorides (coastal/de-icing salt) tidal zone	Cl	< 6000 ppm	1.4410, 1.4547, 1.4529
	Resistivity	> 500 ohm.cm	
	pH	> 4,5	

Note:
1.4410 is a super duplex grade and 1.4547 and 1.4529 are super austenitic grades. These grades are not generally used in construction applications and fall outside the scope of this Design Manual.

3.4 Design for corrosion control

The most important step in preventing corrosion problems is selecting an appropriately resistant stainless steel with suitable fabrication procedures for the given environment. However, after specifying a particular steel, much can be achieved in realising the full potential of the steel's resistance by careful attention to detailing. Anti corrosion actions should ideally be considered at the planning stage and during detailed design.

Table 3.2 gives a check list for consideration. Not all recommendations would give the best detail from a structural strength point of view and neither are they intended to be applied in all environments. In particular, in environments of low corrosivity or where regular maintenance is carried out, many would not be required. Figure 3.1 illustrates poor and good design features for durability.

Table 3.2 Design and specification for corrosion control

Avoid dirt, moisture and corrosive deposit entrapment
• orient angle and channel profiles to minimise the likelihood of deposit or moisture retention • provide drainage holes, ensuring they are of sufficient size to prevent blockage • avoid horizontal surfaces • specify a small slope on gusset stiffeners which nominally lie in a horizontal plane • use tubular and bar sections (seal tubes with dry gas or air where there is a risk of harmful condensates forming) • specify smooth finishes, or, if rougher finishes are unavoidable, orient the grain vertically if possible.
Avoid or seal crevices
• use welded rather than bolted connections when possible • use closing welds or mastic fillers • preferably dress/profile welds to smooth the surface • prevent biofouling • use flexible inert washers or high quality sealants for above ground, non-immersed bolted connections.
Reduce the likelihood of stress corrosion cracking in those specific environments where it may occur (see Section 3.2.4):
• minimise fabrication stresses by careful choice of welding sequence • shot peen (but avoid the use of iron/carbon steel shot to avoid surface embedment of carbon steel particles).
Reduce likelihood of pitting (see Section 11):
• remove weld spatter • pickle stainless steel to remove heat tint. Strongly oxidising chloride-containing reagents such as ferric chloride should be avoided; instead, a pickling bath or a pickling paste, both containing a mixture of nitric acid and hydrofluoric acid, should be used. Welds should always be cleaned up to restore corrosion resistance. Other means such as mechanical cleaning with abrasives or glass beads blasting, or local electrolysis may also be used to clean heat tint and welds. • avoid pick-up of carbon steel particles (e.g. use workshop area and tools dedicated to stainless steel) • follow a suitable maintenance programme.
Reduce likelihood of bimetallic corrosion (see Section 3.2.3):
• provide electrical insulation between bolted metals with inert materials such as neoprene • use paints appropriately • minimise periods of wetness • use metals that are close to each other in electrical potential.

Figure 3.1 Poor and good design features for durability

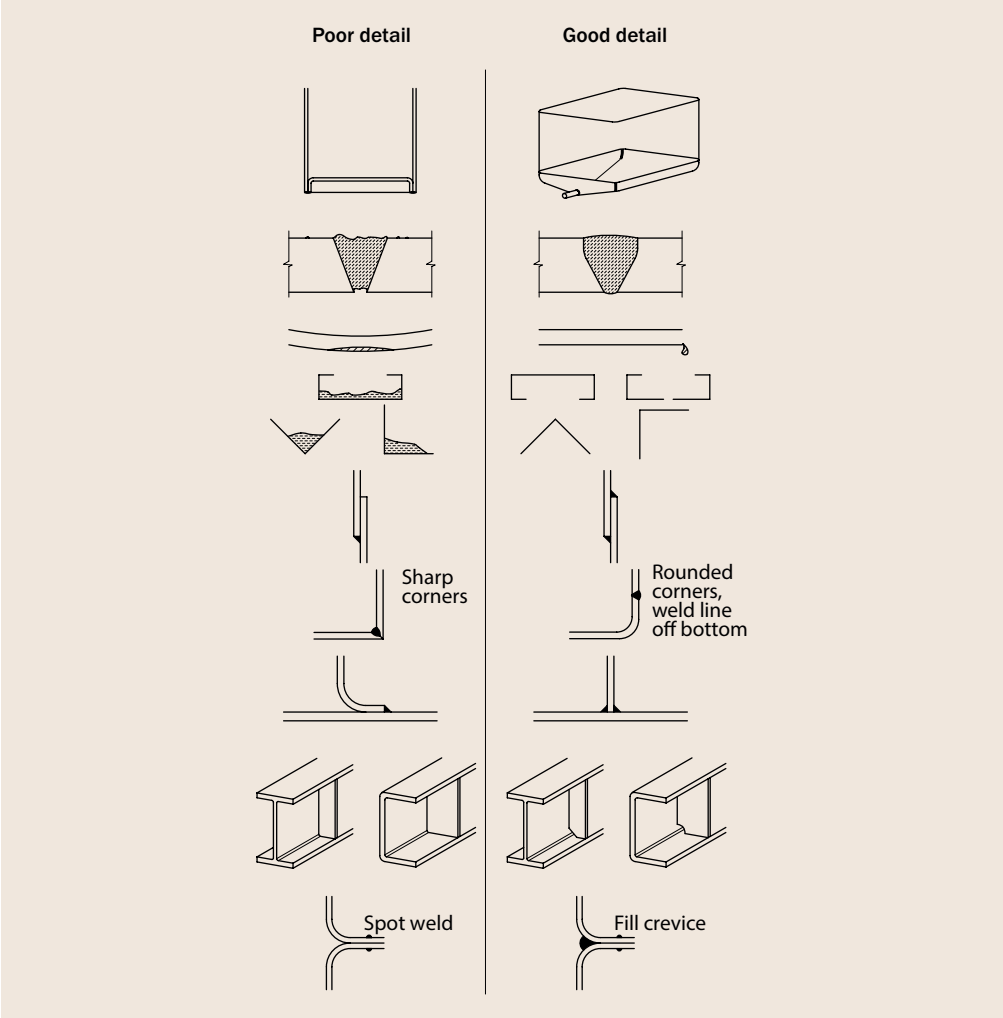

3.5 Selection of materials

3.5.1 Introduction

In the great majority of structural applications utilising stainless steel, it is the metal's corrosion resistance which is being exploited, whether this be for reasons of aesthetics, minimal maintenance or long-term durability. Corrosion resistance must therefore be the primary factor in choosing a suitable grade.

The selection of an appropriate stainless steel must take into account the service environment, fabrication requirements like bend radii and welding, surface finish, and the maintenance of the structure. Additionally, the designer must determine the criteria for corrosion failure. If the component must remain structurally sound for a defined period of time and appearance is not important, acceptable corrosion rates are considered during selection and a less corrosion-resistant stainless steel may be satisfactory. If however a pristine corrosion-free appearance is important, then a more corrosion resistant stainless steel, a smoother surface finish, or more frequent cleaning may be required. It should be noted that the maintenance requirement is minimal; merely washing down the stainless

steel, even naturally by rain, can maintain or improve the initial appearance and assist in extending the service life.

The first step in material selection is to characterise the service environment, including reasonably anticipated deviations from the nominal design conditions. In addition to exposure to corrosive substances, operational, climate and design details that can influence performance must be considered as well as the expected service life. For example, in industrial applications, corrosive chemical combinations and concentrations, exposure times, surface deposit accumulations, acidity, and maintenance cleaning can all influence performance. In exterior applications, exposure to heavy cleaning rain (or degree of sheltering), moisture levels (e.g. humidity, rain heaviness, fog), airborne particulate levels, salt spray (e.g. a rocky coast or roadway), splashing or immersion in chloride (salt) water, and similar factors must be considered. In all applications, design details like unsealed crevices, contact with other metals, and finish specification can influence performance. Possible future developments or change of use should also be considered. It should also be noted that installations can be in close proximity but have very different exposure levels.

Candidate grades can then be chosen to give overall satisfactory corrosion resistance in the anticipated environment. The selection of a suitable steel should consider which possible forms of corrosion might occur. Consideration should then be given to mechanical properties, ease of fabrication, availability of product forms, surface finish and costs.

3.5.2 Procedure for grade selection of austenitic and duplex stainless steels in EN 1993-1-4

Annex A of EN 1993-1-4 gives a procedure for the selection of stainless steel for load-bearing applications. The procedure is applicable to structural steelwork and reference should be made to EN 1992 and EN 1996 for guidance on material selection for fixings into concrete and masonry respectively. The procedure does not take into account:

- grade/product availability,
- surface finish requirements, for example for architectural or hygiene reasons,
- methods of joining/connecting.

The procedure assumes that the following criteria will be met:

- the service environment is in the near neutral pH range (pH 4 to 10),
- the structural parts are not directly exposed to, or part of, a chemical process flow stream,
- the service environment is not permanently or frequently immersed in seawater.

If these conditions are not met, specialist advice should be sought.

The procedure is suitable for environments found within Europe only. It may be particularly misleading in certain parts of the world such as the Middle East, Far East and Central America.

The procedure involves the following steps:

- Determination of the **Corrosion Resistance Factor (CRF)** for the environment (Table 3.3);
- Determination of the **Corrosion Resistance Class (CRC)** from the CRF (Table 3.4).

Table 3.5 lists grades in each CRC. The choice of a specific grade within a CRC will depend on other factors in addition to corrosion resistance, such as strength and availability in the required product form. Specification of the material by CRC and design strength, e.g. CRC II and $f_y = 450\ \mathrm{N/mm^2}$, is sufficient to allow the supplier to determine the actual grade from the CRC.

The procedure applies to components exposed in external environments. For components in internally controlled environments, the CRF is 1,0. An internally controlled environment is one which is either air-conditioned, heated or contained within closed doors. Multi-storey car parks, loading bays or other structures with large openings should be considered as external environments. Indoor swimming pools are special cases of internal environments (Section 3.5.3).

The CRF depends on the severity of the environment and is calculated as follows:

$$\mathrm{CRF} = F_1 + F_2 + F_3$$

where
F_1 = Risk of exposure to chlorides from salt water or de-icing salts;
F_2 = Risk of exposure to sulphur dioxide;
F_3 = Cleaning regime or exposure to washing by rain.

The value of F_1 for applications on the coastline depends on the particular location in Europe and is derived from experience with existing structures, corrosion test data and chloride distribution data. The large range of environments within Europe means that in some cases the calculated CRF will be conservative.

National Annexes may specify whether a less severe CRF can be chosen when validated local operating experience or test data support such a choice. The UK National Annex permits the use of a less severe CRF when local operating experience of at least 5 years duration demonstrates the suitability of a grade in the adjacent lower CRC. However, the maximum permitted improvement to the CRF is +5. The performance data should be obtained from a location less than 5 km from the proposed site and, for coastal locations, less than 1 km inland from the proposed site. Evaluation of the performance should consider the material grade, quality of surface finish, orientation of the components and exposure to airborne contaminants (particularly chlorides) to ensure these are comparable to the proposed design.

Different parts of the same structure may have different exposure conditions, for example one part may be fully exposed and another part fully sheltered. Each exposure case should be assessed separately.

The procedure assumes that the requirements of EN 1090-2 are followed in relation to welding procedures and post weld cleaning, and avoidance or removal and cleaning of contamination of the stainless steel surfaces after thermal or mechanical cutting. Failure to do so may reduce the corrosion resistance of welded parts.

Table 3.3 Determination of Corrosion Resistance Factor CRF

$CRF = F_1 + F_2 + F_3$

F_1	**Risk of exposure to chlorides from salt water or de-icing salts**	
1	Internally controlled environment	
0	Low risk of exposure	$M > 10$ km or $S > 0{,}1$ km
-3	Medium risk of exposure	$1\ \text{km} < M \leq 10$ km or $0{,}01\ \text{km} < S \leq 0{,}1$ km
-7	High risk of exposure	$0{,}25\ \text{km} < M \leq 1$ km or $S \leq 0{,}01$ km
-10	Very high risk of exposure	Road tunnels where de-icing salt is used or where vehicles might carry de-icing salt into the tunnel
-10	Very high risk of exposure	$M \leq 0{,}25$ km
		North Sea coast of Germany and all Baltic coastal areas
-15	Very high risk of exposure	$M \leq 0{,}25$ km
		Atlantic coast line of Portugal, Spain and France. English Channel and North Sea Coastline of UK, France, Belgium, Netherlands and Southern Sweden. All other coastal areas of UK, Norway, Denmark and Ireland. Mediterranean Coast.
Note:	M is distance from the sea and S is distance from roads with de-icing salts.	

F_2	**Risk of exposure to sulphur dioxide**	
0	Low risk of exposure	<10 µg/m³ average gas concentration
-5	Medium risk of exposure	$10 - 90$ µg/m³ average gas concentration
-10	High risk of exposure	$90 - 250$ µg/m³ average gas concentration
Note:	For European coastal environments the sulphur dioxide concentration is usually low. For inland environments the sulphur dioxide concentration is either low or medium. The high classification is unusual and associated with particularly heavy industrial locations or specific environments such as road tunnels. Sulphur dioxide concentration may be evaluated according to the method in ISO 9225.	

F_3	**Cleaning regime or exposure to washing by rain (if $F_1 + F_2 \geq 0$, then $F_3 = 0$)**
0	Fully exposed to washing by rain
-2	Specified cleaning regime
-7	No washing by rain or no specified cleaning
Note:	If the component is to be regularly inspected for any signs of corrosion and cleaned, this should be made clear to the user in written form. The inspection, cleaning method and frequency should be specified. The more frequently cleaning is carried out, the greater the benefit. The frequency should not be less than every 3 months. Where cleaning is specified it should apply to all parts of the structure, and not just those easily accessible and visible.

Table 3.4 Determination of Corrosion Resistance Class CRC

Corrosion Resistance Factor (CRF)	**Corrosion Resistance Class (CRC)**
CRF = 1	I
0 ≥ CRF > -7	II
-7 ≥ CRF > -15	III
-15 ≥ CRF ≥ -20	IV
CRF < -20	V

Table 3.5 Grades in each Corrosion Resistance Class CRC

Corrosion resistance class CRC				
I	II	III	IV	V
1.4003	1.4301	1.4401	1.4439	1.4565
1.4016	1.4307	1.4404	1.4462	1.4529
1.4512	1.4311	1.4435	1.4539	1.4547
	1.4541	1.4571		1.4410
	1.4318	1.4429		1.4501
	1.4306	1.4432		1.4507
	1.4567	1.4162		
	1.4482	1.4662		
		1.4362		
		1.4062		
		1.4578		

Note 1: The Corrosion Resistance Classes are only intended for use with this grade selection procedure and are only applicable to structural applications.

Note 2: A grade from a higher class may be used in place of the class indicated by the CRF.

3.5.3 Swimming pool environments

To address the risk of stress corrosion cracking (SCC) in pool atmospheres, only the steel grades given in Table 3.6 should be used for load-bearing parts exposed to atmospheres above indoor swimming pools. The National Annex may specify if less frequent cleaning is permitted. (This is not permitted by the UK National Annex.)

Table 3.6 Steel grades for indoor swimming pool atmospheres

Load-bearing parts in swimming pool atmospheres	Corrosion resistance class CRC
Load-bearing members which are regularly cleaned[1]	CRC III or CRC IV (excluding 1.4162, 1.4662, 1.4362, 1.4062)
Load-bearing members which are not regularly cleaned	CRC V (excluding 1.4410, 1.4501 and 1.4507)
All fixings, fasteners and threaded parts	CRC V (excluding 1.4410, 1.4501 and 1.4507)

Note 1: If the component is to be regularly inspected for any signs of corrosion and cleaned, this should be made clear to the user in written form. The inspection, cleaning method and frequency should be specified. The more frequently cleaning is carried out, the greater the benefit. The frequency should not be less than every week. Where cleaning is specified, it should apply to all parts of the structure, and not just those easily accessible and visible.

3.5.4 Procedure for grade selection for ferritic stainless steels

Ferritic stainless steels are appropriate for use in moderately corrosive environments with limited exposure to atmospheric pollutants and chlorides. There is a risk of staining of these steels in many environments but often this is cosmetic and does not affect integrity. Table 3.7 provides conservative guidance on grade selection for four grades.

Table 3.7 Grade selection for ferritic stainless steels

Grade selection for high quality finish
(i.e. no tolerance of visible staining on the exposed surface)

Grade	C1	C2	C3	C4	C5
1.4003	Y	X	X	No guidance given because of a shortage of corrosion data	
1.4509	Y	X	X		
1.4621, 1.4521	Y	Y	X		

Grade selection with tolerance of cosmetic corrosion
(i.e. staining and minor pitting may occur. but will not affect the structural integrity of the component)

Grade	C1	C2	C3	C4	C5
1.4003	Y	(Y)	X	No guidance given because of a shortage of corrosion data	
1.4509	Y	Y	(Y)		
1.4621, 1.4521	Y	Y	Y		

The corrosivity categories are taken from EN ISO 12944-2:2009 and defined below:

Corrosivity category and risk	Examples of typical environments in a temperate climate	
	Exterior	Interior
C1 very low		Heated buildings with clean atmospheres, e.g. offices, shops, schools, hotels
C2 low	Atmospheres with low level of pollution. Mostly rural areas	Unheated buildings where condensation may occur, e.g. depots, sports halls
C3 medium	Urban and industrial atmospheres. moderate sulphur dioxide pollution. Coastal area with low salinity	Production rooms with high humidity e.g. food-processing plants, laundries, breweries, dairies
C4 high	Industrial areas and coastal areas with moderate salinity	Chemical plants, swimming pools, coastal, ship and boatyards
C5 very high	Industrial areas with high humidity and aggressive atmosphere. Coastal and offshore areas with high salinity	Buildings or areas with almost permanent condensation and high pollution

Notes

Y indicates the grade is appropriate for the environment classification.

X indicates the grade is inappropriate for the service environment.

(Y) indicates that caution is required for these combinations of grade and environment. There is a risk of staining and localised corrosion at exposed welds and fixings. This risk is greatest where stagnant water and/or atmospheric pollutants (particularly chlorides) may accumulate.

1. The C1 classification assumes the service condition is an internal environment with no direct exposure to the weather or chlorides. This would include areas of buildings such as roof spaces. perimeter walls and steel behind cladding.
2. Welds and mechanical fixings through stainless steels produce crevices which may be more susceptible to corrosion on exposed panels. This risk is greatest where the surfaces allow accumulation of water or atmospheric pollutants.
3. The ISO classification considers wind-blown chlorides from the sea but not from road de-icing salts. The user should take this into account if the structure is close to roads that use de-icing salts.

BASIS OF DESIGN

4.1 General requirements

A structure should be designed and fabricated so that it can:

- remain fit for use during its intended life
- sustain the loads which may occur during construction, installation and usage
- localise damage due to accidental overloads
- have adequate durability in relation to maintenance costs.

The above requirements can be satisfied by using suitable materials, by appropriate design and detailing and by specifying quality control procedures for construction and maintenance.

Structures should be designed by considering all relevant limit states.

4.2 Limit state design

Limit states are limiting conditions which, when exceeded, make the structure unable to meet design performance criteria. Three classes of limit states are recognised: ultimate limit states, serviceability limit states and durability limit states. Ultimate limit states are those which, if exceeded, can lead to collapse of part or the whole of the structure, endangering the safety of people. Serviceability limit states correspond to states beyond which specified service criteria are no longer met. Durability limit states can be regarded as subsets of the ultimate and serviceability limit states depending on whether, for example, the corrosion effects the strength of the structure or its aesthetic appearance.

For ultimate limit states, relationships of the following form have to be satisfied:

$$E_d \leq R_d \tag{4.1}$$

where:

E_d is the design value of the effect of actions such as an internal moment or vector in the member or element under consideration due to the factored applied loading acting on the structure, and

R_d is the corresponding design resistance, as given in the appropriate clause in these recommendations.

The design resistance, R_d, is generally given as R_k/γ_M where R_k is a characteristic resistance and γ_M is a partial factor. The partial factor γ_M takes on various values. Table 4.1 gives the γ_M values to be used with this Design Manual which are taken from EN 1993-1-4 and EN 1993-1-8. These values for γ_M should also be used in combination with design rules in other application parts of EN 1993, for instance for bridges (EN 1993-2), or towers, masts and chimneys (EN 1993-3), superseding the recommended γ_M values given in these parts.

Reference should also be made to the National Annex to EN 1993-1-4 and other relevant parts of EN 1993 for the country for which the structure is being designed because modified values for γ_M may be given that should be used instead of the values given in Table 4.1. The UK National Annexes to EN 1993-1-4 and EN 1993-1-8 adopt the recommended values in Table 4.1. (If a National Annex is not available, then γ_M factors should be agreed with the relevant national regulator.)

As an alternative to analysis, the design resistance may be assessed by testing of materials, components and structures (for guidance see Section 10).

Table 4.1 Recommended values of γ_M

For resistance of:	Symbol	Value (EN 1993-1-4)
Cross-sections (whatever the class)	γ_{M0}	1,10
Members to instability assessed by member checks	γ_{M1}	1,10
Cross-sections in tension to fracture	γ_{M2}	1,25
Bolts, welds, pins and plates in bearing	γ_{M2}	1,25

For grades of stainless steel not specifically included in Table 2.1 of EN 1993-1-4, the values of the γ_M factors should be increased by 10%.

4.3 Loading

The loading on a stainless steel structure should be determined in the same way as for a carbon steel structure, i.e. in accordance with EN 1991.

CROSS-SECTION DESIGN

5.1 General

The recommendations in Sections 5 and 6 apply to cross-sections with elements complying with the dimensional limits of Section 5.2.

The width-to-thickness ratios of elements that are partly or wholly in compression determine whether they are subject to local buckling, with a consequential reduction in the resistance of the cross-section. Elements and cross-sections are classified as Class 1, 2, 3 or 4 depending on the susceptibility to local buckling and their rotation capacity (Class 1 and 2), see Section 5.3.

The reduced resistance of Class 4 cross-sections may be allowed for in design by the use of effective widths of elements, see Section 5.4.1.

Mid-line dimensions may only be used for calculating section properties of cold formed members and sheeting. For other sections, the overall dimensions should be used. EN 1993-1-3 and EN 1993-1-5 permit mid-line dimensions to be used in calculating resistances. EN 1993-1-1 also allows the use of mid-line dimensions in calculating resistances in certain cases (see 6.2.1(9) but also 6.2.5(2) of EN 1993-1-1).

5.2 Maximum width-to-thickness ratios

Table 5.1 gives maximum width-to-thickness ratios for stainless steel elements.

5.3 Classification of cross-sections

5.3.1 General

In principle, stainless steel cross-sections may be classified in the same way as those of carbon steel. Four classes of cross-section are defined as follows:

Class 1 cross-sections are those which can form a plastic hinge with the rotation capacity required from plastic analysis.

Class 2 cross-sections are those which can develop their plastic moment resistance, but have limited rotation capacity.

Class 3 cross-sections are those in which the calculated stress in the extreme compression fibre of the steel member can reach its yield strength, but local buckling is liable to prevent development of the plastic moment resistance.

Class 4 cross-sections are those in which local buckling will occur before the attainment of yield strength in one or more parts of the cross-section.

The classification of a cross-section depends on the highest (least favourable) class of its constituent parts that are partially or wholly in compression. It should be noted that the cross-section classification can vary according to the proportion of moment or axial load present and thus can vary along the length of a member.

Table 5.1 Maximum width-to-thickness ratios

a.	Flat element or intermediately stiffened element connected to a web along one edge with the other edge unsupported:	$b/t \leq 50$	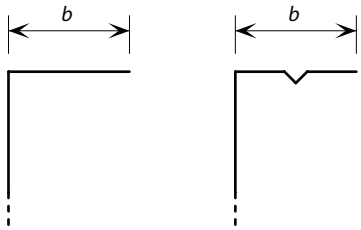
b.	Flat element or intermediately stiffened element connected to a web along one edge and provided with a small simple lip along the other edge	$b/t \leq 60$ $c/t \leq 50$	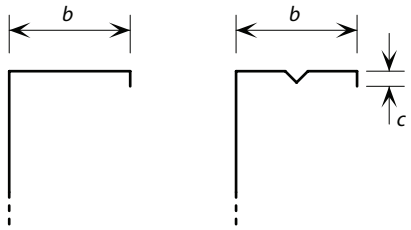
c.	Flat element or intermediately stiffened element connected along both edges to webs or flanges:	$b/t \leq 400$	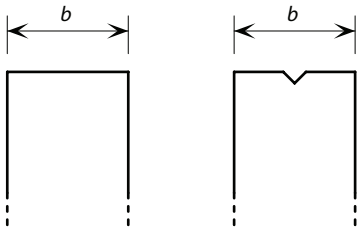
		$h/t \leq 400$	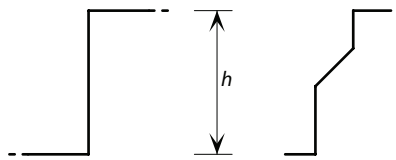

Note: Flat elements supported as in a. above with b/t ratios greater than approximately 30 and flat elements supported otherwise with b/t ratios greater than approximately 75 are likely to develop visual distortion at serviceability design loads.

5.3.2 Classification limits for parts of cross-sections

Sections are classified as Class 1, 2, or 3 depending on the limits set out in Table 5.2. Those sections which do not meet the criteria for Class 3 sections are classified as Class 4.

Table 5.2 Maximum width-to-thickness ratios for compression parts

Internal compression parts

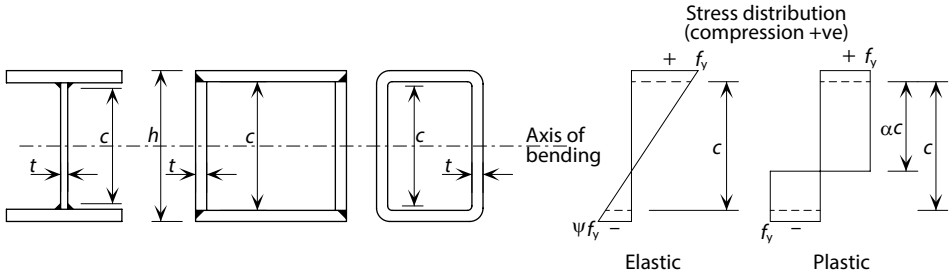

Class	Part subject to bending	Part subject to compression	Part subject to bending and axial force
1	$c/t \leq 72{,}0\varepsilon$	$c/t \leq 33{,}0\varepsilon$	When $\alpha > 0{,}5$: $c/t \leq 396{,}0\varepsilon/(13\alpha - 1)$ When $\alpha \leq 0{,}5$: $c/t \leq 36{,}0\varepsilon/\alpha$
2	$c/t \leq 76{,}0\varepsilon$	$c/t \leq 35{,}0\varepsilon$	When $\alpha > 0{,}5$: $c/t \leq 420{,}0\varepsilon/(13\alpha - 1)$ When $\alpha \leq 0{,}5$: $c/t \leq 38{,}0\varepsilon/\alpha$
3	$c/t \leq 90{,}0\varepsilon$	$c/t \leq 37{,}0\varepsilon$	$c/t \leq 18{,}5\varepsilon\sqrt{k_\sigma}$ For k_σ see 5.4.1

$$\varepsilon = \left[\frac{235}{f_y}\frac{E}{210\,000}\right]^{0,5}$$

Grade	1.4301	1.4401	1.4462
f_y (N/mm²)	210	220	460
ε	1,03	1,01	0,698

Notes:
For hollow sections, c may be taken as $(h - 3t)$ or $(b - 3t)$
$E = 200 \times 10^3$ N/mm²

$$\alpha = \frac{1}{2}\left(1 + \frac{N_{Ed}}{f_y\, c \sum t_w}\right)$$ for sections which are symmetrical about the major axis

Table 5.2 (Continued) Maximum width-to-thickness ratios for compression parts

Outstand flanges

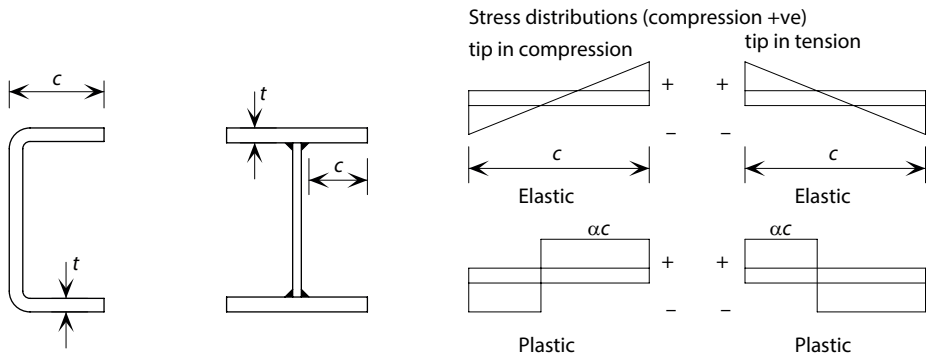

Class	Type of section	Part subject to compression	Part subject to bending and axial force	
			Tip in compression	Tip in tension
1	Cold formed and welded	$c/t \le 9{,}0\varepsilon$	$c/t \le \dfrac{9\varepsilon}{\alpha}$	$c/t \le \dfrac{9\varepsilon}{\alpha\sqrt{\alpha}}$
2	Cold formed and welded	$c/t \le 10{,}0\varepsilon$	$c/t \le \dfrac{10{,}0\varepsilon}{\alpha}$	$c/t \le \dfrac{10{,}0\varepsilon}{\alpha\sqrt{\alpha}}$
3	Cold formed and welded	$c/t \le 14{,}0\varepsilon$	$c/t \le 21{,}0\varepsilon\sqrt{k_\sigma}$ For k_σ see 5.4.1	

Angles

Refer also to Outstand flanges

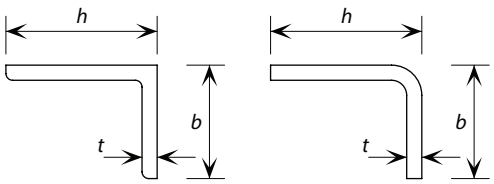

Does not apply to angles in continuous contact with other components

Class	Section in compression
3	$\dfrac{h}{t} \le 15{,}0\varepsilon$; $\dfrac{b+h}{2t} \le 11{,}5\varepsilon$

$$\varepsilon = \left[\frac{235}{f_y}\frac{E}{210\,000}\right]^{0,5}$$

Grade	1.4301	1.4401	1.4462
f_y (N/mm²)	210	220	460
ε	1,03	1,01	0,698

Notes:
For cold formed channels, a less conservative approach is to set $c = b_p$ where b_p is the distance from the tip of the flange to the centre of the corner radius (see Figure 5.5)

$E = 200\times10^3$ N/mm²

$$\alpha = \frac{1}{2}\left(1 + \frac{N_{Ed}}{f_y\, c \sum t_w}\right)$$ for sections which are symmetrical about the major axis

Table 5.2 (Continued) Maximum width-to-thickness ratios for compression parts

Tubular sections

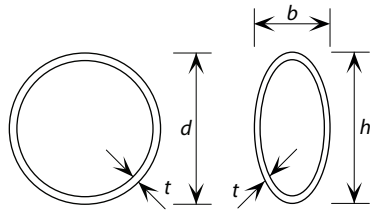

Class	Section in bending	Section in compression
1	$d_e/t \le 50\varepsilon^2$	$d_e/t \le 50\varepsilon^2$
2	$d_e/t \le 70\varepsilon^2$	$d_e/t \le 70\varepsilon^2$
3	$d_e/t \le 280\varepsilon^2$ For $d_e > 240$ mm and/or $d_e/t > 280\varepsilon^2$, see EN 1993-1-6	$d_e/t \le 90\varepsilon^2$ For $d_e/t > 90\varepsilon^2$, see EN 1993-1-6

$$\varepsilon = \left[\frac{235}{f_y}\frac{E}{210\,000}\right]^{0,5}$$

Grade	1.4301	1.4401	1.4462
f_y (N/mm²)	210	220	460
ε	1,03	1,01	0,698

Notes:

$E = 200\times10^3$ N/mm²

d_e is the equivalent diameter. For circular hollow sections (CHS) $d_e = d$.

For elliptical hollow sections (EHS) d_e varies with the mode of loading:

For EHS in compression:

$$d_e = h\left[1+\left\{1-2,3\left(\frac{t}{h}\right)^{0,6}\right\}\left(\frac{h}{b}-1\right)\right] \qquad \text{or, conservatively } d_e = \frac{h^2}{b}$$

For EHS in major (*y-y*) axis bending:

When $\frac{h}{b} \le 1,36$ $\qquad d_e = \frac{b^2}{h}$

When: $\frac{h}{b} > 1,36$ $\qquad d_e = 0,4\frac{h^2}{b}$

For EHS in minor (*z-z*) axis bending or compression and minor axis bending: $d_e = \frac{h^2}{b}$

For EHS in compression and major (*y-y*) axis bending, d_e may be determined by linear interpolation between the equivalent diameter for compression and that for bending based on α for Class 1 and 2 cross-sections and ψ for Class 3 and 4 cross-sections.

5.4 Effective widths

5.4.1 Effective widths of elements in Class 4 cross-sections

The properties of Class 4 cross-sections may be established by calculation using the effective widths of the component parts in full or partial compression. Alternatively, testing may be utilised, see Section 10.

The effective area of a Class 4 cross-section in full or partial compression, A_{eff}, is the gross area of the cross-section minus the sum of the ineffective areas of each slender element making up the cross-section. The effective area of each Class 4 element is the effective breadth b_{eff} calculated below multiplied by the element thickness. When the cross-section is subject to bending, an effective moment of inertia I_{eff} and effective section modulus W_{eff} also need to be calculated.

The effective widths of elements in full or partial compression may be obtained from Table 5.3 for internal elements, and from Table 5.4 for outstand elements.

The effective widths of flange elements in compression may be based on the stress ratio ψ determined for the gross cross-section (ψ is defined in Table 5.3 and Table 5.4). The effective width of a web element should be based on the stress ratio ψ determined for a cross-section comprising the effective area of the compression flange but the gross area of the web and tension flange.

The reduction factor ρ may be calculated as follows:

Internal compression elements (cold formed or welded):

$$\rho = \frac{0{,}772}{\bar{\lambda}_p} - \frac{0{,}079}{\bar{\lambda}_p^2} \quad \text{but} \leq 1{,}0 \tag{5.1}$$

Outstand compression elements (cold formed or welded):

$$\rho = \frac{1}{\bar{\lambda}_p} - \frac{0{,}188}{\bar{\lambda}_p^2} \quad \text{but} \leq 1{,}0 \tag{5.2}$$

where $\bar{\lambda}_p$ is the element slenderness defined as:

$$\bar{\lambda}_p = \frac{\bar{b} / t}{28{,}4\varepsilon\sqrt{k_\sigma}} \tag{5.3}$$

in which:

t is the relevant thickness

k_σ is the buckling factor corresponding to the stress ratio ψ from Table 5.3 or Table 5.4 as appropriate

$\bar{b}$ is the relevant width as follows:

$\bar{b} = d$ for webs, except for rectangular hollow sections (RHS)

$\bar{b}$ = flat element width for webs of RHS, which can be taken as $h - 3t$

$\bar{b} = b$ for internal flange elements (except RHS)

$\bar{b}$ = flat element width for flanges of RHS, which can be taken as $b - 3t$

$\bar{b} = c$ for outstand flanges

$\bar{b} = h$ for equal leg angles and unequal leg angles

ε is the material factor defined in Table 5.2.

EN 1993-1-4 states that $\bar{b}$ for the webs and flanges of RHS can conservatively be taken as $h - 2t$ and $b - 2t$ respectively. In the next revision of EN 1993-1-4 it is expected that this will be changed to $h - 3t$ and $b - 3t$, aligning with the definition in EN 1993-1-5.

For cold formed open sections, a less conservative approach is to set $\bar{b} = b_p$ where b_p is the notional flat width of the plane element, measured from the midpoints of the adjacent corner elements (see Figure 5.5).

Generally, the neutral axis of the effective section will shift by a dimension e compared to the neutral axis of the gross section, see Figure 5.1 and Figure 5.2. This should be taken into account when calculating the properties of the effective cross-section.

When the cross-section is subject to axial compression, the recommendations of Section 6.5.2 take account of the additional moment $\Delta M_{Ed} = N_{Ed}\, e_N$, where e_N is the shift of the neutral axis when the cross-section is subject to uniform compression, see Figure 5.2.

Table 5.3 Internal compression elements

Stress distribution (compression positive)	Effective width b_{eff}
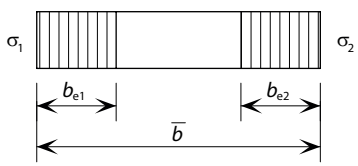	$\psi = 1$ $b_{eff} = \rho\,\bar{b}$ $b_{e1} = 0{,}5\, b_{eff}$ $b_{e2} = 0{,}5\, b_{eff}$
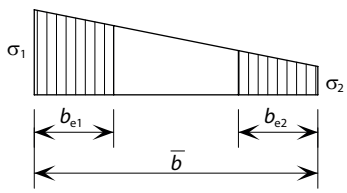	$1 > \psi > 0$ $b_{eff} = \rho\,\bar{b}$ $b_{e1} = \dfrac{2\, b_{eff}}{5 - \psi}$ $b_{e2} = b_{eff} - b_{e1}$
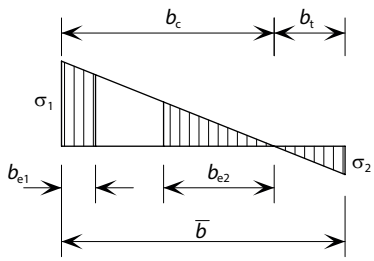	$\psi < 0$ $b_{eff} = \rho b_c = \rho\,\bar{b}\,/(1 - \psi)$ $b_{e1} = 0{,}4\, b_{eff}$ $b_{e2} = 0{,}6\, b_{eff}$

$\psi = \sigma_2/\sigma_1$	1	$1 > \psi > 0$	0	$0 > \psi > -1$	-1	$-1 > \psi \geq -3$
Buckling factor k_σ	4,0	$8{,}2 / (1{,}05 + \psi)$	7,81	$7{,}81 - 6{,}29\psi + 9{,}78\psi^2$	23,9	$5{,}98\ (1 - \psi)^2$

Table 5.4 Outstand compression elements

Stress distribution (compression positive)	Effective width b_{eff}
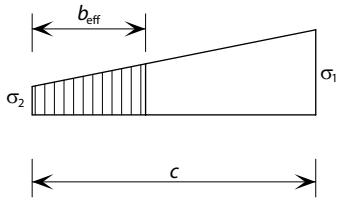	$1 > \psi > 0$ $b_{eff} = \rho c$
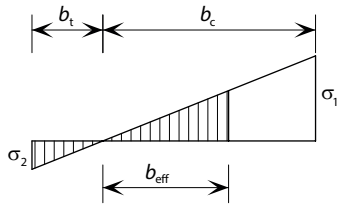	$\psi < 0$ $b_{eff} = \rho b_c = \rho c/(1 - \psi)$

$\psi = \sigma_2 / \sigma_1$	1	0	−1	$+1 \geq \psi \geq -3$
Buckling factor k_σ	0,43	0,57	0,85	$0{,}57 - 0{,}21\psi + 0{,}07\psi^2$

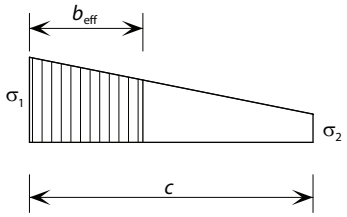	$1 > \psi > 0$ $b_{eff} = \rho b_c$
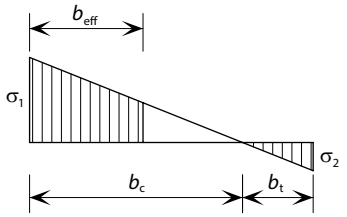	$\psi < 0$ $b_{eff} = \rho b_c = \rho c/(1 - \psi)$

$\psi = \sigma_2 / \sigma_1$	1	$1 > \psi > 0$	0	$0 > \psi > -1$	−1
Buckling factor k_σ	0,43	$0{,}578 / (\psi + 0{,}34)$	1,70	$1{,}7 - 5\psi + 17{,}1\psi^2$	23,8

Figure 5.1
Class 4 cross-section subject to bending moment

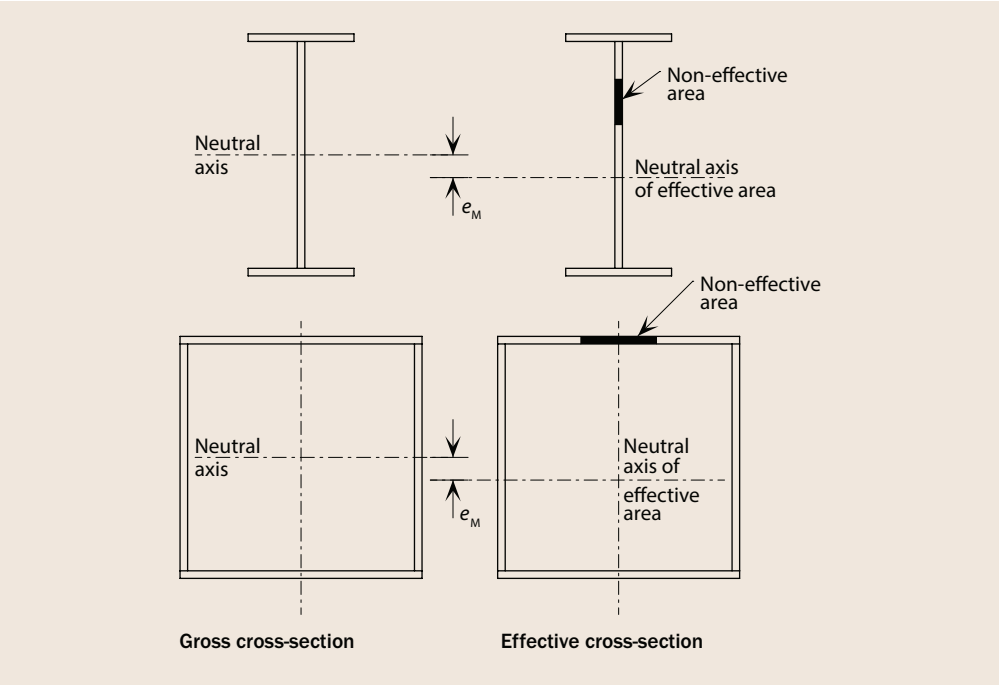

Figure 5.2
Class 4 cross-section subject to compression

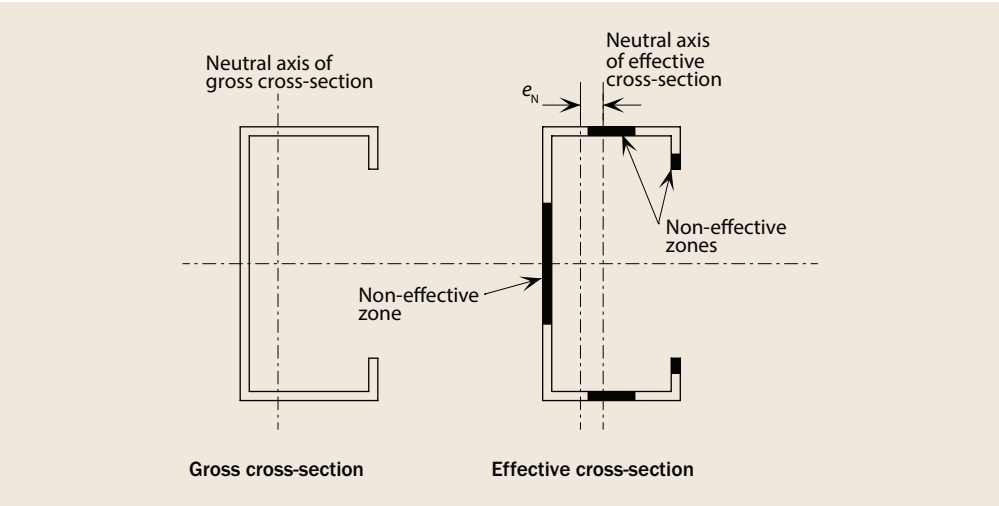

5.4.2 Effects of shear lag

Shear lag in flanges may be neglected if $b_0 < L_e/50$, where b_0 is taken as the flange outstand or half the width of an internal element and L_e is the length between points of zero bending moment. Where this limit for b_0 is exceeded, the effects of shear lag in flanges should be considered; the guidance for carbon steel in EN 1993-1-5 is applicable. Note that EN 1993-1-5 requires that shear lag be taken into account at both the ultimate and the serviceability limit states.

5.4.3 Flange curling

The effect on the load-bearing resistance of curling (i.e. inward curvature towards the neutral plane) of a very wide flange in a profile subjected to flexure, or of a flange in an arched profile subjected to flexure in which the concave side is in compression, should be taken into account unless such curling is less than 5% of the depth of the profile

cross-section. If the curling is larger, then the reduction in load-bearing resistance, for instance due to a decrease in the length of the lever arm for parts of the wide flanges, and the possible effect of the bending of the webs should be taken into account.

Width-to-thickness ratios of flanges in typical stainless steel beams are unlikely to be susceptible to flange curling. Where required, the guidance for carbon steel in EN 1993-1-3 is applicable.

5.5 Stiffened elements

5.5.1 Edge stiffeners

The guidance for carbon steel in EN 1993-1-3 is applicable.

5.5.2 Intermediate stiffeners

The guidance for carbon steel in EN 1993-1-3 is applicable.

5.5.3 Trapezoidal sheeting profiles with intermediate flange stiffeners

The effective cross-section of a flange with intermediate stiffeners and subject to uniform compression should be assumed to consist of the reduced effective areas $A_{s,red}$ including two strips of width $0{,}5b_{eff}$ or $15t$ adjacent to the stiffener, see Figure 5.3 and Figure 5.4.

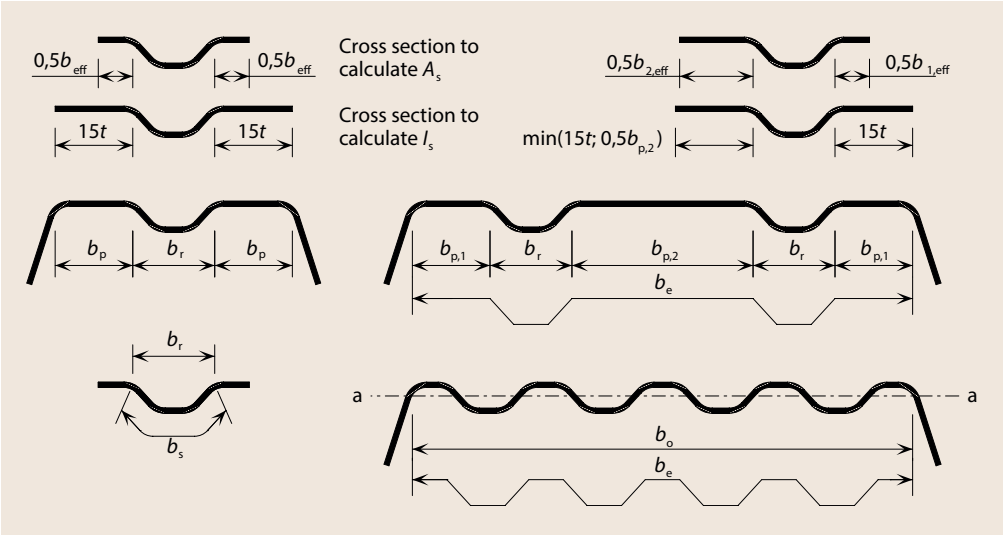

Figure 5.3 Compression flange with one, two or multiple stiffeners

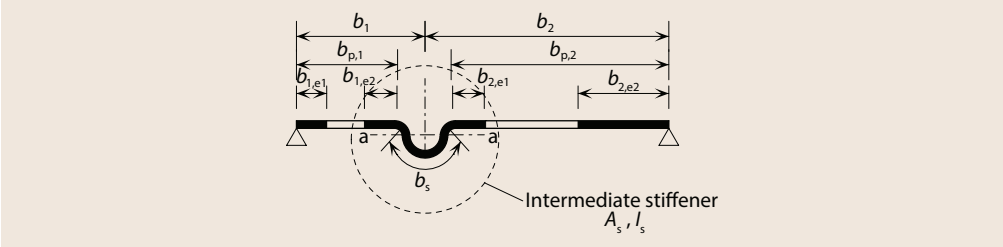

Figure 5.4 Intermediate stiffener

It is expected that the distance $15t$ for determining the reduced effective area $A_{s,red}$ will be increased to $20t$ in the next revision of EN 1993-1-3.

For one central flange stiffener, the elastic critical buckling stress $\sigma_{cr,s}$ (used for determining $\bar{\lambda}_d$) should be obtained from:

$$\sigma_{cr,s} = \frac{4,2k_w E}{A_s}\sqrt{\frac{I_s t^3}{4b_p^2\left(2b_p + 3b_s\right)}} \tag{5.4}$$

where:

b_p is the notional flat width of the plane element

b_s is the stiffener width, measured around the perimeter of the stiffener

A_s is the cross-sectional area of the stiffener cross-section

I_s is the second moment of area of the stiffener cross-section

These parameters are defined in Figure 5.3, Figure 5.4 and Figure 5.5.

k_w is a coefficient that allows for partial rotational restraint of the stiffened flange by the webs or other adjacent elements, see below. For the calculation of the effective cross-section in axial compression, $k_w = 1,0$.

For two symmetrically placed flange stiffeners, the elastic critical buckling stress $\sigma_{cr,s}$ should be obtained from:

$$\sigma_{cr,s} = \frac{4,2k_w E}{A_s}\sqrt{\frac{I_s t^3}{8b_1^2\left(3b_e - 4b_1\right)}} \tag{5.5}$$

in which:

$$b_e = 2b_{p,1} + b_{p2} + 2b_s \tag{5.6}$$

$$b_1 = b_{p,1} + 0,5b_r \tag{5.7}$$

where:

$b_{p,1}$ is the notional flat width of an outer plane element, see Figure 5.4,

$b_{p,2}$ is the notional flat width of the central plane element, see Figure 5.4

b_r is the overall width of a stiffener, see Figure 5.3.

The value of k_w may be calculated from the compression flange buckling wavelength l_b as follows:

$$\frac{l_b}{s_w} \geq 2, \quad k_w = k_{wo} \tag{5.8}$$

$$\frac{l_b}{s_w} < 2, \quad k_w = k_{wo} - \left(k_{wo} - 1\right)\left[\frac{2l_b}{s_w} - \left(\frac{l_b}{s_w}\right)^2\right] \tag{5.9}$$

where:

s_w is the slant height of the web, see Figure 5.5.

Figure 5.5 Notional widths of plane elements b_p allowing for corner radii

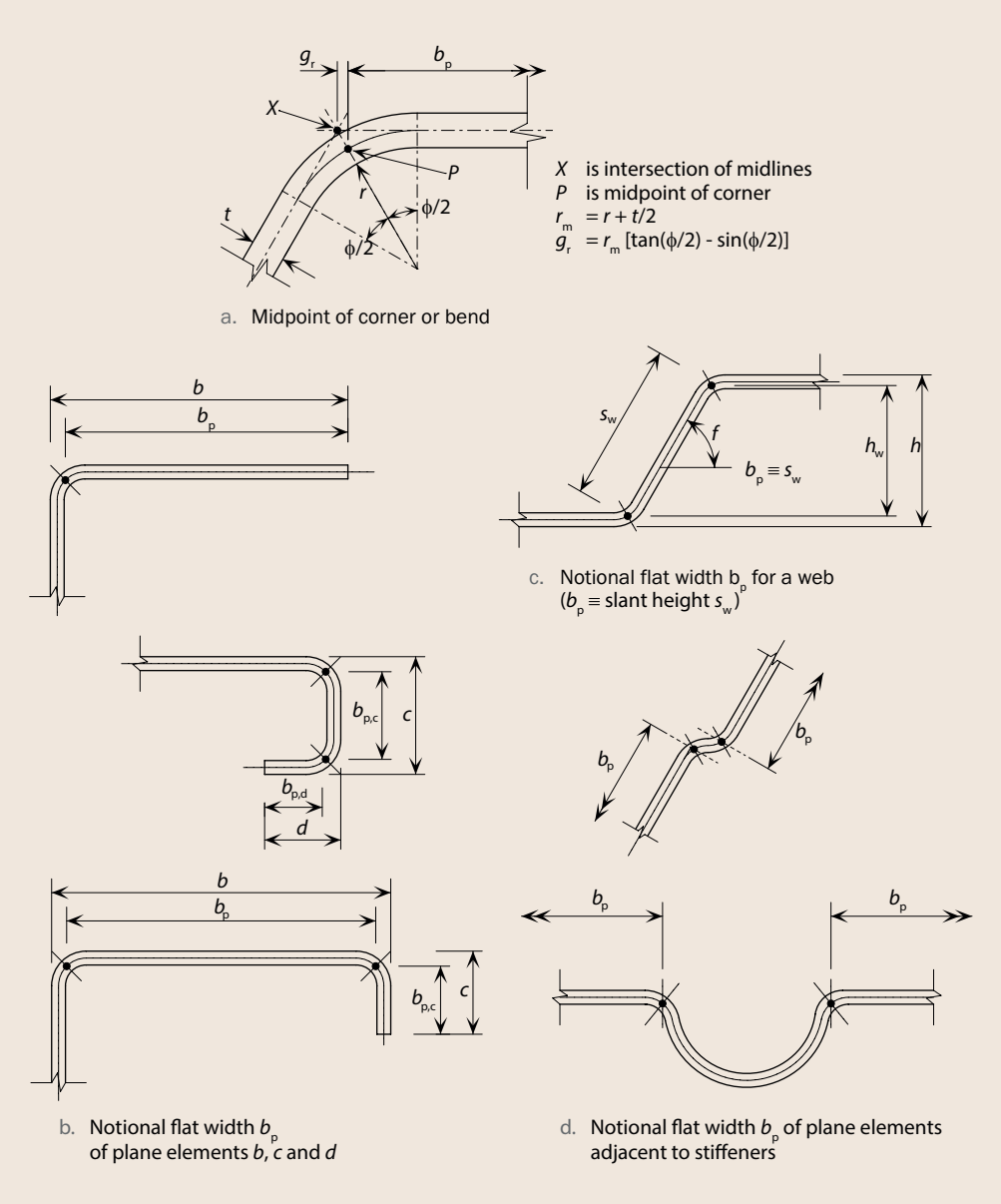

Alternatively, the rotational restraint coefficient k_w may conservatively be taken as equal to 1,0 corresponding to a pin-jointed condition.

The values of l_b and k_{wo} may be determined from:

a. for a compression flange with one intermediate stiffener:

$$l_b = 3,07 \sqrt[4]{\frac{I_s\, b_p^2 \left(2b_p + 3b_s\right)}{t^3}} \tag{5.10}$$

$$k_{wo} = \sqrt{\frac{s_w + 2b_d}{s_w + 0,5b_d}} \tag{5.11}$$

$$b_d = 2b_p + b_s \tag{5.12}$$

b. for a compression flange with two or three intermediate stiffeners:

$$l_b = 3,65\sqrt[4]{\frac{I_s b_1^2\left(3b_e - 4b_1\right)}{t^3}} \tag{5.13}$$

$$k_{wo} = \sqrt{\frac{\left(2b_e + s_w\right)\left(3b_e - 4b_1\right)}{b_1\left(4b_e - 6b_1\right) + s_w\left(3b_e - 4b_1\right)}} \tag{5.14}$$

The reduced effective area of the stiffener $A_{s,red}$ allowing for distortional buckling should be taken as:

$$A_{s,red} = \chi_d A_s \frac{f_y / \gamma_{M0}}{\sigma_{com,Ed}} \qquad \text{but } A_{s,red} \leq A_s \tag{5.15}$$

where:

$\sigma_{com,Ed}$ is the compressive stress at the centreline of the stiffener (calculated on the basis of the effective cross-section).

If the webs are unstiffened, the reduction factor χ_d should be obtained from the following:

$$\bar{\lambda}_d \leq 0,65 \qquad \chi_d = 1,0 \tag{5.16}$$

$$0,65 < \bar{\lambda}_d < 1,38 \qquad \chi_d = 1,47 - 0,723\,\bar{\lambda}_d \tag{5.17}$$

$$\bar{\lambda}_d \geq 1,38 \qquad \chi_d = \frac{0,66}{\bar{\lambda}_d} \tag{5.18}$$

where $\bar{\lambda}_d = \sqrt{f_y / \sigma_{cr,s}}$

If the webs are also stiffened, reference should be made to EN 1993-1-3.

In determining effective section properties, the reduced effective area $A_{s,red}$ should be represented by using a reduced thickness $t_{red} = t\,(A_{red} / A_s)$ for all the elements included in A_s.

5.6 Calculation of geometric section properties

5.6.1 General

The calculation of section properties should be carried out in accordance with normal good practice taking into account any reduction in the gross area due to local buckling or holes as necessary.

5.6.2 Influence of rounded corners

The influence of rounded corners on cross-section resistance may be neglected if the internal radius $r \leq 5t$ and $r \leq 0,10 b_p$ and the cross-section may be assumed to consist of plane elements with sharp corners. For cross-section stiffness properties the influence of rounded corners should always be taken into account.

The influence of rounded corners on section properties may be taken into account with sufficient accuracy by reducing the properties calculated for an otherwise similar cross-section with sharp corners, see Figure 5.6, using the following approximations:

$$A_g = A_{g,sh}\,(1 - \delta) \tag{5.19}$$

$$I_g = I_{g,sh}\,(1 - 2\delta) \tag{5.20}$$

$$I_w = I_{w,sh}\,(1 - 4\delta) \tag{5.21}$$

in which:

$$\delta = 0{,}43\,\frac{\sum_{j=1}^{n} r_j \dfrac{\varphi_i}{90^o}}{\sum_{i=1}^{m} b_{p,i}} \tag{5.22}$$

where:

A_g	is the area of the gross cross-section
$A_{g,sh}$	is the value of A_g for a cross-section with sharp corners
$b_{p,i}$	is the notional flat width of the plane element i for a cross-section with sharp corners
I_g	is the second moment of area of the gross cross-section
$I_{g,sh}$	is the value of I_g for a cross-section with sharp corners
I_w	is the warping constant of the gross cross-section
$I_{w,sh}$	is the value of I_w for a cross-section with sharp corners
φ_j	is the angle between two plane elements
m	is the number of plane elements
n	is the number of curved elements
r_j	is the internal radius of curved element j.

The reductions given above may also be applied in calculating the effective section properties A_{eff}, $I_{y,eff}$, $I_{z,eff}$ and $I_{w,eff}$, provided that the notional flat widths of the plane elements are measured to the points of intersection of their midlines.

Figure 5.6 Approximate allowance for rounded corners

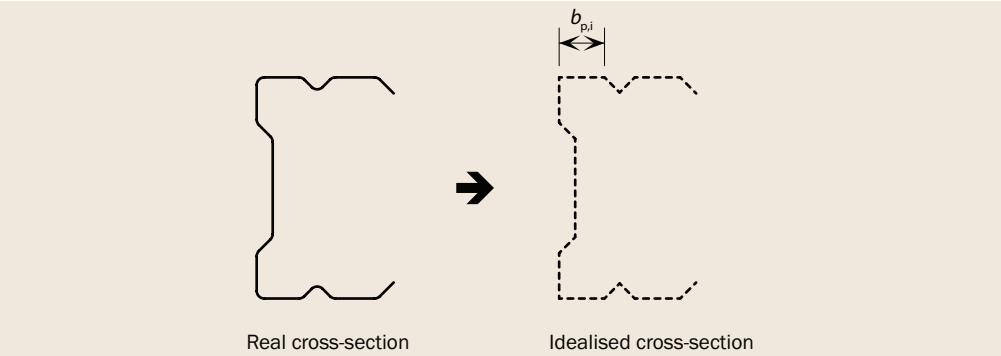

5.6.3 Gross cross-section

When calculating gross cross-section properties, holes for fasteners need not be deducted but allowance should be made for larger openings.

5.6.4 Net section

The net area of a section or element of a section should be taken as its gross area less appropriate deductions for all openings, including holes for fasteners. In the deductions for fasteners, the nominal hole diameter should be used.

Provided that the fastener holes are not staggered, the total area to be deducted for fastener holes should be the maximum sum of the sectional areas of the holes in any cross-section perpendicular to the member axis (see failure plane (2) in Figure 5.7).

When the fastener holes are staggered, the total area to be deducted should be the greater of:

- the deduction for non-staggered holes
- $t\left(nd_0 - \Sigma\left[\frac{s^2}{4p}\right]\right)$

where:

s	is the staggered pitch, the spacing of the centres of two consecutive holes in the chain measured parallel to the member axis
p	is the spacing of the centres of the same two holes measured perpendicular to the member axis
t	is the thickness
n	is the number of holes extending in any diagonal or zig-zag line progressively across the member or part of the member, see Figure 5.7
d_0	is the diameter of the hole.

For sections such as angles with holes in both legs, the gauge should be measured along the centre of the thickness of the material, see Figure 5.8.

For angles connected by one leg, see Section 7.2.

Figure 5.7 Staggered holes and critical fracture lines 1 and 2

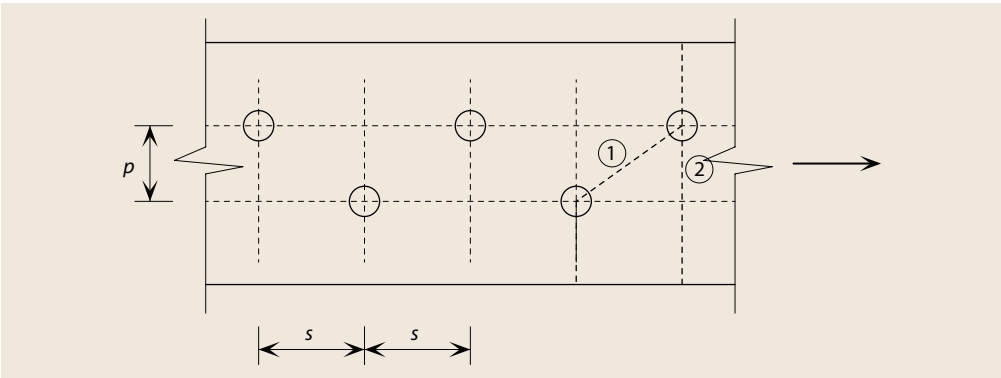

Figure 5.8 Gauge length for angle with holes in both leg

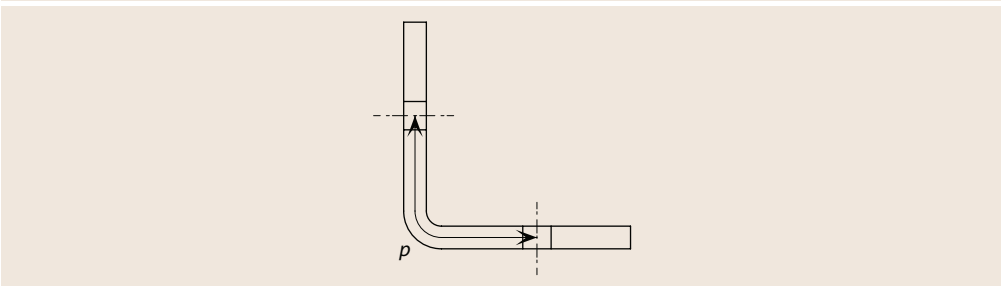

5.7 Resistances of cross-sections

5.7.1 General

This Section relates to the resistance of cross-sections only; a check on possible buckling modes is also required to establish member resistance. Buckling of members is addressed in Section 6. The γ_M factors used in this Section are given in Table 4.1.

The work hardening associated with cold forming operations during fabrication (see Section 2.2.1) will generally increase the cross-sectional resistance. Guidance on how to take advantage of this increased strength arising from fabrication is given in ANNEX B.

Enhanced cross-section design resistances due to the beneficial influence of work hardening in service may be taken into account using the Continuous Strength Method, as described in ANNEX D. Alternatively the strength increase arising from work hardening can be proved by testing (see Section 10).

5.7.2 Cross-sections subject to tension

The resistance of cross-sections subject to uniform tensile stresses only, $N_{t,Rd}$, may be taken as the smaller of:

a) the design plastic resistance of the gross cross-section

$$N_{pl,Rd} = \frac{A_g f_y}{\gamma_{M0}} \tag{5.23}$$

b) the design ultimate resistance of the net cross-section at holes for fasteners

$$N_{u,Rd} = \frac{k A_{net} f_u}{\gamma_{M2}} \tag{5.24}$$

where:

A_g is the gross area

A_{net} is the net cross-sectional area (see Section 5.6.4)

f_y is the characteristic yield strength (generally taken as the minimum specified 0,2 % proof strength, see Table 2.2)

f_u is the characteristic ultimate strength (generally taken as the minimum specified value, see Table 2.2)

k is a factor which depends on the fabrication process for forming the hole and the mode of loading:

$k = 1{,}0$ for sections with smooth holes (i.e. holes without notches), for example holes fabricated by drilling or water jet cutting

$k = 0{,}9$ for sections with rough holes (i.e. holes with notches), for example holes fabricated by punching or flame cutting

$k = 0{,}9$ for structures subjected to fatigue

Equation (5.24) is expected to be introduced into the next revision of EN 1993-1-1 for carbon steel and has been shown to apply also for stainless steel. EN 1993-1-4 currently gives the more conservative expression from EN 1993-1-3:

$$N_{u,Rd} = \frac{k_r A_{net} f_u}{\gamma_{M2}} \tag{5.25}$$

in which

$$k_r = [1 + 3r\,(d_0 / u - 0{,}3)] \tag{5.26}$$

where:

r	= [number of bolts at the cross-section]/[total number of bolts in the connection]
d_0	is the nominal bolt hole diameter
u	$= 2e_2$ but $u \le p_2$
e_2	is the edge distance from the centre of the bolt hole to the adjacent edge, in the direction perpendicular to the direction of load transfer
p_2	is the spacing centre-to-centre of bolt holes, in the direction perpendicular to the direction of load transfer.

5.7.3 Cross-sections subject to compression

The resistance of a cross-section subject to compression, $N_{c,Rd}$, with a resultant acting through the centroid of the gross section (for Class 1, 2 and 3 cross-sections) or the effective section (Class 4 cross-sections) may be taken as:

$$N_{c,Rd} = A_g f_y / \gamma_{M0} \quad \text{for Class 1, 2 or 3 cross-sections} \tag{5.27}$$

$$N_{c,Rd} = A_{eff} f_y / \gamma_{M0} \quad \text{for Class 4 cross-sections} \tag{5.28}$$

Note: Class 4 sections which are not doubly symmetric should be assessed in accordance with 5.7.6 to account for the additional bending moment ΔM_{Ed} due to the eccentricity of the centroidal axial of the effective sections, see Section 5.4.1.

5.7.4 Cross-sections subject to bending moment

In the absence of shear and axial forces, the design moment resistance of a cross-section subject to a uniaxial moment, $M_{c,Rd}$, should be taken as:

$$M_{c,Rd} = W_{pl} f_y / \gamma_{M0} \quad \text{for Class 1 or 2 cross-sections} \tag{5.29}$$

$$M_{c,Rd} = W_{el,min} f_y / \gamma_{M0} \quad \text{for Class 3 cross-sections} \tag{5.30}$$

$$M_{c,Rd} = W_{eff,min} f_y / \gamma_{M0} \quad \text{for Class 4 cross-sections} \tag{5.31}$$

where:

W_{pl} is the plastic section modulus

$W_{el,min}$ is the elastic section modulus corresponding to the fibre with the maximum elastic stress (but see Section 5.1 for cold formed cross-sections)

$W_{eff,min}$ is the elastic modulus of effective section corresponding to the fibre with the maximum elastic stress (but see Section 5.1 for cold formed cross-sections).

For cross-sections where bending is applied about both axes, see Section 5.7.6.

5.7.5 Cross-sections subject to shear

The plastic shear resistance of a cross-section, $V_{pl,Rd}$ may generally be taken as:

$$V_{pl,Rd} = \left(\frac{A_v (f_y/\sqrt{3})}{\gamma_{M0}} \right) \tag{5.32}$$

where A_v is the shear area (see Table 5.5)

Table 5.5 Shear area A_v for different cross-sections

Cross-section	Shear area A_v
Rolled I and H sections, load parallel to web	$A - 2bt_f + (t_w + 2r)t_f$ but not less than $\eta h_w t_w$
Rolled channel sections, load parallel to web	$A - 2bt_f + (t_w + r)t_f$
T-section, load parallel to web	rolled: $A - bt_f + (t_w + 2r)\frac{t_f}{2}$
	welded: $t_w\left(h - \frac{t_f}{2}\right)$
Welded I, H and box sections, load parallel to web	$\eta \sum (h_w t_w)$
Welded I, H, channel and box section, load parallel to flanges	$A - \sum (h_w t_w)$
Rolled rectangular hollow sections of uniform thickness	load parallel to depth: $Ah/(b+h)$
	load parallel to width: $Ab/(b+h)$
Circular hollow sections of uniform thickness	$2A/\pi$
Elliptical hollow sections of uniform thickness, load parallel to depth	$2(h-t)/t$
Elliptical hollow sections of uniform thickness, load parallel to depth	$2(b-t)/t$

where:

A is the cross-sectional area

b is the overall breadth

h is the overall depth

h_w is the depth of the web

r is the root radius

t_f is the flange thickness

t_w is the web thickness (if the web thickness is not constant, t_w should be taken as the minimum thickness).

η see EN 1993-1-5. (EN 1993-1-4 recommends $\eta = 1{,}20$.)
Note: The same value of η should be used for calculating the shear buckling resistance as is used for calculating the plastic shear resistance.

The resistance to shear buckling should be also checked, see Section 6.4.3.

5.7.6 Cross-sections subject to combination of loads

When an axial force is present, allowance should be made for its effect on the plastic moment resistance. For Class 1 and 2 cross-sections, the following criterion should be satisfied:

$$M_{Ed} \leq M_{N,Rd} \tag{5.33}$$

where $M_{N,Rd}$ is the design plastic moment resistance reduced due to the axial force N_{Ed}.

For doubly symmetrical I- and H-sections or other flange sections, allowance need not be made for the effect of the axial force on the plastic resistance moment about the *y-y* axis when both the following criteria are satisfied:

$$N_{Ed} \leq 0{,}25 N_{pl,Rd} \tag{5.34}$$

$$N_{Ed} \leq 0{,}5 h_w \, t_w f_y / \gamma_{M0} \tag{5.35}$$

In the absence of shear force, for Class 3 and Class 4 cross-sections the maximum longitudinal stress should satisfy the criterion:

$$\sigma_{x,Ed} \leq f_y / \gamma_{M0} \tag{5.36}$$

where:

$\sigma_{x,Ed}$ is the design value of the local longitudinal stress due to moment and axial force, taking account of fastener holes where relevant.

For Class 4 cross-sections, as an alternative to the criterion in Equation (5.36), the following simplified criterion may be used:

$$\frac{N_{Ed}}{A_{eff} \, f_y / \gamma_{M0}} + \frac{M_{y,Ed} + N_{Ed} \, e_{Ny}}{W_{eff,y,min} \, f_y / \gamma_{M0}} + \frac{M_{z,Ed} + N_{Ed} \, e_{Nz}}{W_{eff,z,min} \, f_y / \gamma_{M0}} \leq 1 \tag{5.37}$$

where:

A_{eff} is the effective area of the cross-section when subjected to uniform compression

$W_{eff,y,min}$ is the effective section modulus of the cross-section when subjected only to moment about the relevant axis

e_N is the shift of the relevant centroidal axis when the cross-section is subjected to compression only.

Note that for angles, the *y* and *z* axes in the above should be taken as the *u* and *v* axes respectively.

When V_{Ed} exceeds 50% of $V_{pl,Rd}$, the design resistance of the cross-section to combinations of moment and axial force should be calculated using a reduced yield strength $(1 - \rho) f_y$ for the shear area, where $\rho = (2V_{Ed} / V_{pl,Rd} - 1)^2$.

MEMBER DESIGN

6.1 Introduction

The design checks required for stainless steel members are similar to those required for carbon steel members. It is recommended that the forces and moments in the members are derived from an elastic global analysis.

In addition to the cross-sectional resistance, see Section 5, consideration should be given to overall buckling of members, as addressed in this section.

A possible design approach for checking against buckling in stainless steel members is to use the tangent modulus corresponding to the buckling stress instead of the initial modulus as used in carbon steel rules. Assuming similar levels of geometric and residual stress imperfections in carbon steel and stainless steel members, this generally leads to satisfactory results when it is based on validated carbon steel rules. This approach is therefore available to the designer. However, it requires iterative solution techniques and therefore has been avoided in this Design Manual except in some cases when it has been used to derive effective design curves for use with the initial modulus. Instead, emphasis has been given to calibrating against available experimental data.

The following subsections are intended for use with singly, doubly or point-symmetric uniform sections. The resistance of members not possessing any axis of symmetry should be verified by appropriate tests.

6.2 Tension members

Members subject to tension only do not suffer any instability due to buckling. Their design may therefore be based only on the cross-section resistance, see Section 5.7.2, and the resistance of their connections, see Section 7.

For an angle connected by one leg or other unsymmetrically connected members:

$$N_{t,Rd} = N_{pl,Rd} \leq N_{u,Rd} \tag{6.1}$$

where the terms are defined in Section 5.7.2 and $N_{u,Rd}$ is determined from Section 7.2.3.

6.3 Compression members

6.3.1 General

Members in compression are susceptible to a number of possible buckling modes including:

- Plate buckling (Class 4 sections only)
- Flexural buckling
- Torsional buckling
- Torsional-flexural buckling.

Doubly symmetric cross-sections (CHS, RHS, I sections etc.)

Doubly symmetric cross-sections do not need to be checked for torsional-flexural buckling, since the shear centre coincides with the centroid of the cross-section. However, torsional buckling may be critical.

Circular and square hollow sections will not fail by torsional buckling.

For the range of RHS sizes typically used in construction, torsional buckling will not be critical. Torsional buckling in RHS need only be considered for sections with unusually high h/b ratios.

Singly symmetric cross-sections (equal-leg angles, channels etc.)

It is necessary to check sections such as single channels and equal-leg angles for torsional-flexural buckling as the shear centre does not coincide with the centroid of the cross-section.

Point symmetric cross-sections (Z-sections, cruciform sections etc.)

Torsional buckling may be the critical buckling mode for these sections.

6.3.2 Plate buckling

Plate buckling within Class 4 sections is taken into account by the use of an effective cross-section area. Note that the additional moment ΔM_{Ed} due to the eccentricity of the centroidal axis of the effective section in asymmetric Class 4 cross-sections should be considered in accordance with Section 6.5.

6.3.3 Flexural buckling

The resistance to flexural buckling should be determined from:

$$N_{\mathrm{b,Rd}} = \chi A f_{\mathrm{y}} / \gamma_{\mathrm{M1}} \qquad \text{for Class 1, 2 and 3 cross-sections} \qquad (6.2)$$

$$N_{\mathrm{b,Rd}} = \chi A_{\mathrm{eff}} f_{\mathrm{y}} / \gamma_{\mathrm{M1}} \qquad \text{for Class 4 cross-sections} \qquad (6.3)$$

where:

A is the gross area

A_{eff} is the effective area of Class 4 cross-sections

χ is the reduction factor accounting for buckling, given by:

$$\chi = \frac{1}{\phi + \left[\phi^2 - \bar{\lambda}^2\right]^{0,5}} \leq 1 \tag{6.4}$$

in which:

$$\phi = 0,5\left(1 + \alpha\left(\bar{\lambda} - \bar{\lambda}_0\right) + \bar{\lambda}^2\right) \tag{6.5}$$

$$\bar{\lambda} = \sqrt{\frac{Af_y}{N_{cr}}} = \frac{L_{cr}}{i}\frac{1}{\pi}\sqrt{\frac{f_y}{E}}$$ for Class 1, 2 and 3 cross-sections (6.6)

$$\bar{\lambda} = \sqrt{\frac{A_{eff} f_y}{N_{cr}}} = \frac{L_{cr}}{i}\frac{1}{\pi}\sqrt{\frac{f_y \frac{A_{eff}}{A}}{E}}$$ for Class 4 cross-sections (6.7)

where:

α is the imperfection factor defined in Table 6.1

N_{cr} is the elastic critical force for the relevant buckling mode based on the gross cross-sectional properties

$\bar{\lambda}_0$ is the limiting non-dimensional slenderness defined in Table 6.1

L_{cr} is the buckling length in the buckling plane considered. The determination of the buckling length should be based upon structural mechanics principles, taking boundary conditions into account

i is the radius of gyration about the relevant axis, determined using the properties of the gross cross-section

Table 6.1
Values for α and $\bar{\lambda}_0$ for flexural buckling

Type of member	Axis of buckling	Austenitic and duplex		Ferritic	
		α	$\bar{\lambda}_0$	α	$\bar{\lambda}_0$
Cold formed angles and channels	Any	0,76	0,2	0,76	0,2
Cold formed lipped channels	Any	0,49	0,2	0,49	0,2
Cold formed RHS	Any	0,49	0,3	0,49	0,2
Cold formed CHS/ EHS	Any	0,49	0,2	0,49	0,2
Hot finished RHS	Any	0,49	0,2	0,34	0,2
Hot finished CHS/EHS	Any	0,49	0,2	0,34	0,2
Welded or hot rolled open sections	Major	0,49	0,2	0,49	0,2
	Minor	0,76	0,2	0,76	0,2

Figure 6.1 gives the flexural buckling curves.

Figure 6.1 Buckling curves for flexural buckling

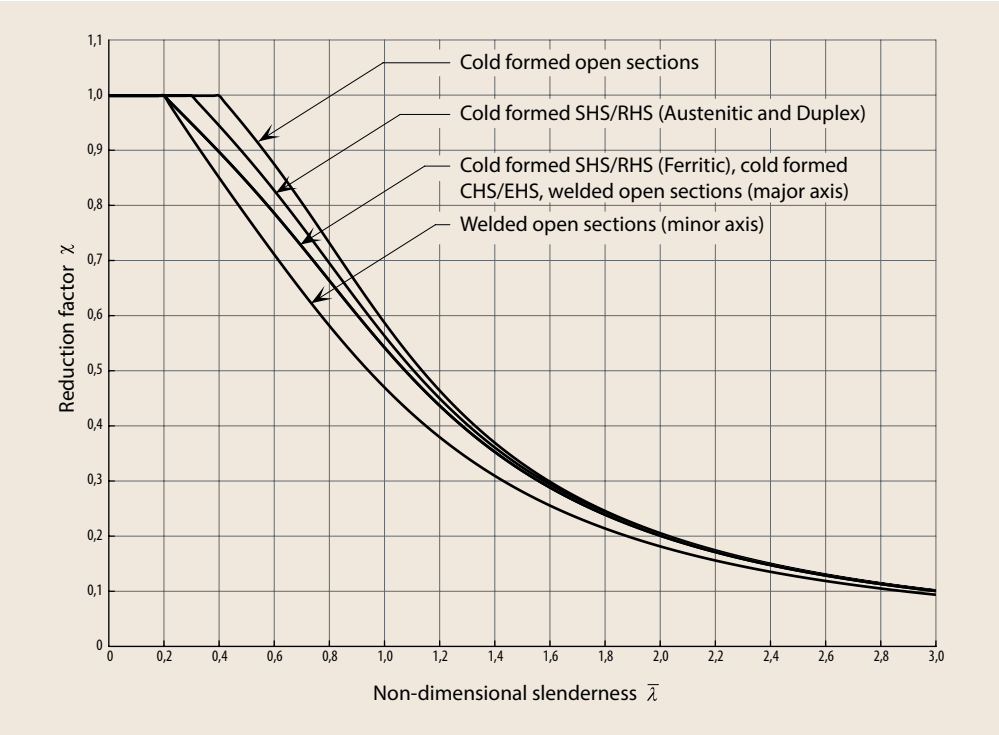

The buckling effects may be ignored and only cross-sectional checks apply if:

$$\bar{\lambda} \leq \bar{\lambda}_0 \quad \text{or} \quad \frac{N_{Ed}}{N_{cr}} \leq \bar{\lambda}_0^{\,2}$$

The buckling curves given in Figure 6.1 and Table 6.1 are more conservative than those in EN 1993-1-4 (values of α and $\bar{\lambda}_0$ are given below in Table 6.2). This is because experimental research over the last 10 years has shown that the EN 1993-1-4 buckling curves for cold formed open sections and cold formed hollow sections are unduly optimistic, and that there is a difference in buckling behaviour of ferritic stainless steel cold formed RHS columns compared to austenitic and duplex stainless steels. It is expected that the next revision to EN 1993-1-4 will give the flexural buckling curves in Figure 6.1 and Table 6.1.

Table 6.2 Values of α and $\bar{\lambda}_0$ for flexural buckling in EN 1993-1-4

Type of member	α	$\bar{\lambda}_0$
Cold formed open sections	0,49	0,40
Hollow sections (welded and seamless)	0,49	0,40
Welded open sections (major axis)	0,49	0,20
Welded open sections (minor axis)	0,76	0,20

The values for α and $\bar{\lambda}_0$ do not apply to hollow sections if they are annealed after fabrication (which is rarely the case).

6.3.4 Torsional and torsional-flexural buckling

The resistance to these buckling modes should be determined according to Section 6.3.3 but substituting $\bar{\lambda}$ by $\bar{\lambda}_T$, as given by Equations (6.8) and (6.9), and taking $\alpha = 0{,}34$ and $\bar{\lambda}_0 = 0{,}2$.

$$\bar{\lambda}_T = \sqrt{\frac{A f_y}{N_{cr}}} \qquad \text{for Class 1, 2 and 3 cross-sections} \tag{6.8}$$

$$\bar{\lambda}_T = \sqrt{\frac{A_{eff} f_y}{N_{cr}}} \qquad \text{for Class 4 cross-sections} \tag{6.9}$$

in which:

$N_{cr} = N_{cr,TF}$ and $N_{cr} < N_{cr,T}$

where:

$N_{cr,T}$ is the elastic critical torsional buckling force, given by:

$$N_{cr,T} = \frac{1}{i_o^2}\left(GI_t + \frac{\pi^2 EI_w}{l_T^2}\right) \tag{6.10}$$

$N_{cr,TF}$ is the elastic critical torsional-flexural buckling force. For cross-sections that are symmetrical about the *y-y* axis (e.g. $z_o = 0$):

$$N_{cr,TF} = \frac{N_{cr,y}}{2\beta}\left[1 + \frac{N_{cr,T}}{N_{cr,y}} - \sqrt{\left(1 - \frac{N_{cr,T}}{N_{cr,y}}\right)^2 + 4\left(\frac{y_o}{i_o}\right)^2 \frac{N_{cr,T}}{N_{cr,y}}}\right] \tag{6.11}$$

in which:

$$i_o^2 = i_y^2 + i_z^2 + y_o^2 + z_o^2 \tag{6.12}$$

i_y and i_z are the radii of gyration of the gross cross-section about the *y* and *z* axes respectively

y_o and z_o are the shear centre co-ordinates with respect to the centroid of the gross cross-section

G is the shear modulus

l_T is the buckling length of the member for torsional buckling (see EN 1993-1-3)

I_T is the torsional constant of the gross cross-section

I_W is the warping constant of the gross cross-section

β $= 1 - \left(\frac{y_o}{i_o}\right)^2$

$N_{cr,y}$ and $N_{cr,z}$ are the elastic critical axial force for flexural buckling about the *y-y* and *z-z* axes respectively.

For a doubly symmetric cross-section, the shear centre coincides with the centroid, therefore $y_o = 0$ and $z_o = 0$ and

$N_{cr,TF} = N_{cr,T}$ provided $N_{cr,T} < N_{cr,y}$ and $N_{cr,T} < N_{cr,z}$

Note that for angles, the *y* and *z* axes in the above should be taken as the *u* and *v* axes respectively.

6.4 Flexural members

6.4.1 General

A member is in simple bending under loads acting normal to the longitudinal axis if it is connected in such a way as to eliminate twisting or tensile or compressive end loading.

The following criteria should be considered for establishing the moment resistance of a beam:

- Yielding of the cross-section (see Section 5.7)
- Plate buckling (Class 4 section only, see Section 5.7)
- Lateral torsional buckling (see Section 6.4.2)
- Shear buckling (see Section 6.4.3)
- Local strength at points of loading or reaction (see Section 6.4.4).

Note that for flexural members, the effects of shear lag and flange curling may have to be accounted for in design, see Sections 5.4.2and 5.4.3.

Biaxial bending should be treated as described in Section 6.5.2.

6.4.2 Lateral-torsional buckling

A laterally unrestrained member subject to major axis bending should be verified against lateral torsional buckling. The possibility of lateral-torsional buckling may be discounted and only cross-section checks apply for the following classes of member:

- Beams subject to bending only about the minor axis
- Beams with sufficient restraint to the compression flange throughout their length by adequate bracing
- Beams where the lateral non-dimensional slenderness parameter $\bar{\lambda}_{LT} \leq 0{,}4$ or $\dfrac{M_{Ed}}{M_{cr}} \leq 0{,}16$
- beams with certain types of cross-sections, such as square or circular hollow sections, which are not susceptible to lateral-torsional buckling.

For all other classes of member, the resistance to lateral torsional buckling should be determined from:

$$M_{b,Rd} = \chi_{LT}\, W_y f_y / \gamma_{M1} \tag{6.13}$$

where:

$W_y = W_{pl,y}$ for Class 1 or 2 cross-sections
$W_y = W_{el,y}$ for Class 3 cross-sections
$W_y = W_{eff,y}$ for Class 4 cross-sections
χ_{LT} is a reduction factor accounting for lateral torsional buckling, given by:

$$\chi_{LT} = \frac{1}{\phi_{LT} + \left[\phi_{LT}^{\ 2} - \bar{\lambda}_{LT}^{\ 2}\right]^{0,5}} \leq 1 \tag{6.14}$$

in which:

$$\phi_{LT} = 0,5\left(1+\alpha_{LT}\left(\bar{\lambda}_{LT}-0,4\right)+\bar{\lambda}_{LT}^{2}\right) \tag{6.15}$$

$$\bar{\lambda}_{LT} = \sqrt{\frac{W_y f_y}{M_{cr}}} \tag{6.16}$$

α_{LT} is the imperfection factor
= 0,34 for cold formed sections and hollow sections (welded and seamless)
= 0,76 for welded open sections and other sections for which no test data is available.

M_{cr} is the elastic critical moment for lateral torsional buckling (see ANNEX E).

Note that for angles, the *y* and *z* axes in the above should be taken as the *u* and *v* axes respectively.

Figure 6.2 shows the variation of χ_{LT} against $\bar{\lambda}_{LT}$.

The moment distribution between the lateral restraints of members can be taken into account by the use of a modified value for χ_{LT} where:

$$\chi_{LT,mod} = \frac{\chi_{LT}}{f} \quad \text{but } \chi_{LT,mod} \leq 1,0 \quad \text{and } \chi_{LT,mod} \leq \frac{1}{\bar{\lambda}_{LT}^{2}} \tag{6.17}$$

in which the following minimum value for f is recommended:

$$f = 1 - 0,5\,(1 - k_c)\,[1 - 2,0\,(\bar{\lambda}_{LT} - 0,8)^2] \quad \text{but } f \leq 1,0 \tag{6.18}$$

and

$$k_c = \frac{1}{\sqrt{C_1}} \tag{6.19}$$

Values for C_1 are given in ANNEX E.

Figure 6.2 Buckling curves for lateral-torsional buckling

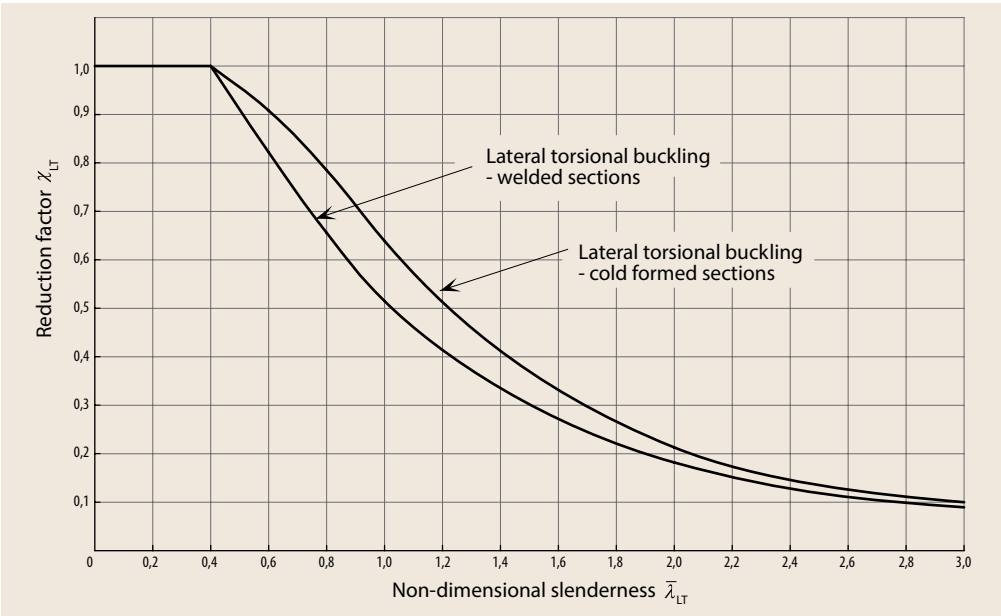

6.4.3 Shear resistance

The shear resistance is limited by either the plastic shear resistance (see Section 5.7.5) or the shear buckling resistance.

The shear buckling resistance only requires checking when:

$$\frac{h_w}{t} \geq \frac{56,2\varepsilon}{\eta} \qquad \text{for an unstiffened web} \qquad (6.20)$$

$$\frac{h_w}{t} \geq \frac{24,3\varepsilon\sqrt{k_\tau}}{\eta} \qquad \text{for a stiffened web} \qquad (6.21)$$

The shear buckling resistance for a beam should be obtained from:

$$V_{b,Rd} = V_{bw,Rd} + V_{bf,Rd} \leq \frac{\eta f_{yw} h_w t}{\sqrt{3}\gamma_{M1}} \qquad (6.22)$$

in which the contribution from the web is given by:

$$V_{bw,Rd} = \frac{\chi_w f_{yw} h_w t}{\sqrt{3}\gamma_{M1}} \qquad (6.23)$$

where:

h_w	is the clear web depth between flanges (Figure 6.3)
ε	is defined in Table 5.2
k_τ	is the shear buckling coefficient
$V_{bw,Rd}$	is the contribution to the shear buckling resistance from the web
$V_{bf,Rd}$	is the contribution to the shear buckling resistance from the flanges
f_{yw}	is the characteristic yield strength of web
η	see EN 1993-1-5 (EN 1993-1-4 recommends $\eta = 1,20$.)

The UK National Annex gives $\eta = 1,20$ when the 0,2% proof strength of the steel is not higher than 460 MPa and when the temperature of the steel does not exceed 400 °C. The value $\eta = 1,0$ should be used when the 0,2% proof strength exceeds 460 MPa and/or the temperature of steel exceeds 400 °C.

Note: The same value of η should be used for calculating the plastic shear resistance as is used for calculating the shear buckling resistance.

Figure 6.3 Notation for geometrical dimensions

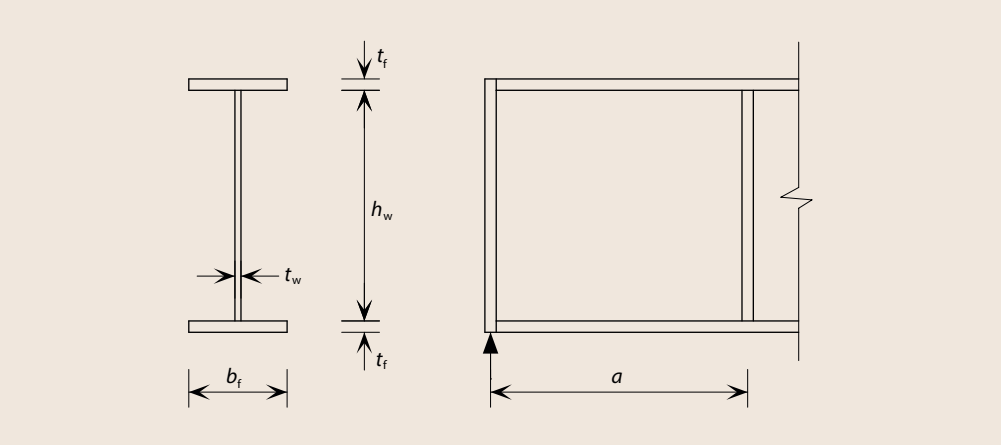

For webs with transverse stiffeners at supports only, and for webs with either intermediate transverse and/or longitudinal stiffeners, the contribution of the web to χ_w is given in Table 6.3.

Table 6.3 Web shear buckling reduction factor χ_w

	χ_w for rigid end post	χ_w for non-rigid end post
$\bar{\lambda}_w \leq \frac{0,65}{\eta}$	η	η
$\frac{0,65}{\eta} < \bar{\lambda}_w < 0,65$	$\frac{0,65}{\bar{\lambda}_w}$	$\frac{0,65}{\bar{\lambda}_w}$
$\bar{\lambda}_w \geq 0,65$	$\frac{1,56}{\left(0,91+\bar{\lambda}_w\right)}$	$\frac{1,19}{\left(0,54+\bar{\lambda}_w\right)}$

For webs with transverse stiffeners at the supports only, the non-dimensional slenderness parameter $\bar{\lambda}_w$ should be taken as:

$$\bar{\lambda}_w = \left(\frac{h_w}{86,4 t_w \varepsilon}\right) \tag{6.24}$$

For webs with transverse stiffeners at the supports and intermediate transverse and/or longitudinal stiffeners, $\bar{\lambda}_w$ should be taken as:

$$\bar{\lambda}_w = \left(\frac{h_w}{37,4 t_w \varepsilon \sqrt{k_\tau}}\right) \tag{6.25}$$

in which k_τ is the minimum shear buckling coefficient for the web panel. For webs with rigid transverse stiffeners and without longitudinal stiffeners or with more than two longitudinal stiffeners, k_τ can be obtained as follows:

$$k_\tau = 5,34 + 4,00\,(h_w/a)^2 + k_{\tau st} \qquad \text{when } a/h_w \geq 1 \tag{6.26}$$

$$k_\tau = 4,00 + 5,34\,(h_w/a)^2 + k_{\tau st} \qquad \text{when } a/h_w < 1 \tag{6.27}$$

where:

$$k_{\tau st} = 9\left(h_w/a\right)^2 \sqrt[4]{\left(\frac{I_{sl}}{t^3 h_w}\right)^3} \qquad \text{but not less than} \quad \frac{2,1}{t}\sqrt[3]{\frac{I_{sl}}{h_w}} \tag{6.28}$$

where:

a is the distance between centrelines of transverse stiffeners, see Figure 6.3.

I_{sl} is the second moment of area of the longitudinal stiffener about the *z-z* axis.

Equations (6.26) and (6.27) also apply to plates with one or two longitudinal stiffeners, if the aspect ratio $a/h_w \geq 3$. For plates with one or two longitudinal stiffeners and an aspect ratio $a/h_w < 3$, reference should be made to EN 1993-1-5 Annex A3.

For simplicity, the contribution from the flanges χ_f may be neglected. However, if the flange resistance is not completely utilised in withstanding the bending moment ($M_{Ed} < M_{f,Rd}$) then the contribution from the flanges may be obtained as follows:

$$V_{bf,Rd} = \frac{b_f\, t_f^2\, f_{yf}}{c\,\gamma_{M1}}\left[1-\left(\frac{M_{Ed}}{M_{f,Rd}}\right)^2\right] \tag{6.29}$$

where:

b_f and t_f are taken for the flange which provides the least axial resistance, b_f being taken as not larger than $15\,\varepsilon\, t_f$ on each side of the web

$M_{f,Rd}$ is the moment of resistance of the cross-section consisting of the area of the effective flanges only, $M_{f,Rd} = M_{f,k}/\gamma_{M0}$

$$c = a\left(0{,}17+\frac{3{,}5 b_f\, t_f^{\,2}\, f_{yf}}{t_w\, h_w^{\,2} f_{yw}}\right) \text{ and } \frac{c}{a} \le 0{,}65 \tag{6.30}$$

f_{yf} is the characteristic yield strength of the flange.

If an axial force N_{Ed} is also applied, the value of $M_{f,Rd}$ should be reduced by a factor:

$$\left[1-\frac{N_{Ed}}{\dfrac{(A_{f1}+A_{f2})\,f_{yf}}{\gamma_{M0}}}\right] \tag{6.31}$$

where A_{f1} and A_{f2} are the areas of the top and bottom flanges, respectively.

The verification should be performed as follows:

$$\eta_3 = \frac{V_{Ed}}{V_{b,Rd}} \le 1{,}0 \tag{6.32}$$

where:

V_{Ed} is the design shear force including shear from torque.

Member verification for biaxial bending and axial compression should be performed as follows:

$$\eta_1 = \frac{N_{Ed}}{f_y\, A_{eff}\,/\,\gamma_{M0}} + \frac{M_{y,Ed}+N_{Ed}\,e_{y,N}}{f_y\, W_{y,eff}\,/\,\gamma_{M0}} + \frac{M_{z,Ed}+N_{Ed}\,e_{z,N}}{f_y\, W_{z,eff}\,/\,\gamma_{M0}} \le 1{,}0 \tag{6.33}$$

where:

A_{eff} is the effective cross-section area (Section 5.4.1)

$e_{y,N}$ is the shift in the position of the neutral axis with respect to the *y* axis (Section 5.4.1)

$e_{z,N}$ is the shift in the position of the neutral axis with respect to the *z* axis (Section 5.4.1)

$M_{y,Ed}$ is the design bending moment with respect to the *y* axis

$M_{z,Ed}$ is the design bending moment with respect to the *z* axis

N_{Ed} is the design axial force

$W_{y,eff}$ is the effective section modulus with respect to the *y* axis (Section 5.4.1)

$W_{z,eff}$ is the effective section modulus with respect to the *z* axis (Section 5.4.1).

Action effects M_{Ed} and N_{Ed} should include global second order effects where relevant. The plate buckling verification of the panel should be carried out for the stress resultants at a distance $0.4\,a$ or $0.5\,b$, whichever is the smallest, from the panel end where the stresses are the greater.

Provided that $\bar{\eta}_3$ (see below) does not exceed $0{,}5$, the design resistance to bending moment and axial force need not be reduced to allow for the shear force. If $\bar{\eta}_3$ is more than $0{,}5$ the combined effects of bending and shear in the web of an I or box girder should satisfy:

$$\bar{\eta}_1 + \left(1 - \frac{M_{f,Rd}}{M_{pl,Rd}}\right)\left(2\bar{\eta}_3 - 1\right)^2 \leq 1{,}0 \qquad \text{for} \quad \bar{\eta}_1 \geq \frac{M_{f,Rd}}{M_{pl,Rd}} \tag{6.34}$$

where:

$M_{f,Rd}$ is the design plastic moment of resistance of the section consisting of the effective area of the flanges

$M_{pl,Rd}$ is the design plastic moment of resistance of the cross-section consisting of the effective area of the flanges and the fully effective web irrespective of its section class.

$$\bar{\eta}_1 = \frac{M_{Ed}}{M_{pl,Rd}} \tag{6.35}$$

$$\bar{\eta}_3 = \frac{V_{Ed}}{V_{bw,Rd}} \tag{6.36}$$

Stresses are taken as positive. M_{Ed} and V_{Ed} should include second order effects where relevant.

The criterion given in Equation (6.34) should be verified at all sections other than those located at a distance less than $h_w/2$ from a support with vertical stiffeners.

If an axial force N_{Ed} is present, then $M_{pl,Rd}$ should be replaced by the reduced plastic resistance moment $M_{N,Rd}$ according to 6.2.9 of EN 1993-1-1 and $M_{f,Rd}$ should be reduced according to Equation (6.31). Reference should be made to EN 1993-1-5 if the axial force is so large that the whole web is in compression.

6.4.4 Web crushing, crippling and buckling

Provided that the flanges are laterally restrained, the resistance of an unstiffened web to forces from concentrated loads or support reactions will be governed by one of three possible failure modes:

- crushing of the web close to the flange, accompanied by plastic deformation of the flange,
- crippling of the web in the form of localised buckling and crushing of the web close to the flange, accompanied by plastic deformation of the flange,
- buckling of the web over most of the depth of the member.

For cold formed structural sections, the guidance in EN 1993-1-3 for carbon steel can be adopted.

For rolled beams and welded girders, the following approach should be adopted, based on the guidance in EN 1993-1-5.

For unstiffened or stiffened webs the design resistance to local buckling under transverse forces should be taken as:

$$F_{Rd} = f_{yw} L_{eff} t_w / \gamma_{M1} \tag{6.37}$$

where:

t_w is the thickness of the web

f_{yw} is the yield strength of the web

L_{eff} is the effective length for resistance to transverse forces, which should be determined from $L_{eff} = \chi_F l_y$

in which:

l_y is the effective loaded length appropriate to the length of stiff bearing s_s

χ_F is the reduction factor due to local buckling.

In addition the effect of the transverse force on the moment resistance of the member should be considered.

To determine L_{eff}, a distinction should be made between three types of force application, as follows:

- forces applied through one flange and resisted by shear forces in the web (Figure 6.4a),
- forces applied to one flange and transferred through the web directly to the other flange (Figure 6.4b),
- forces applied through one flange close to an unstiffened end (Figure 6.4c).

Figure 6.4 Buckling coefficients for different types of load application

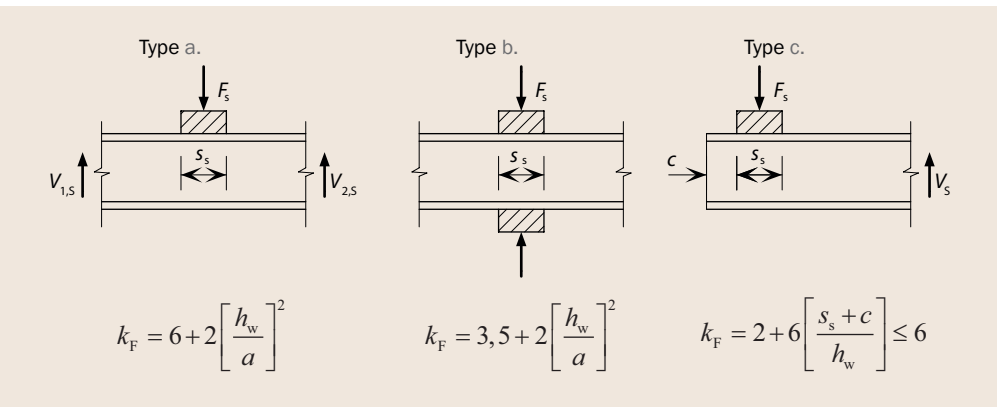

Length of stiff bearing

The length of stiff bearing, s_s, on the flange is the distance over which the applied force is effectively distributed and it may be determined by dispersion of load through solid steel material at a slope of 1:1, see Figure 6.5. However, s_s should not be taken as larger than the depth of the web, h_w.

If several concentrated loads are closely spaced, the resistance should be checked for each individual load as well as for the total load, with s_s as the centre-to-centre distance between outer loads.

Figure 6.5 Length of stiff bearing

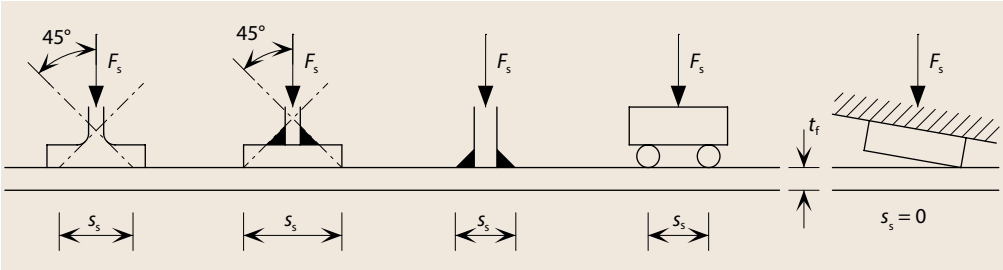

Effective loaded length

The effective loaded length l_y should be calculated using two dimensionless parameters m_1 and m_2 obtained from:

$$m_1 = \frac{f_{yf}\, b_f}{f_{yw}\, t_w} \tag{6.38}$$

$$m_2 = 0{,}02\left(\frac{h_w}{t_f}\right)^2 \qquad \text{for} \quad \bar{\lambda}_F > 0{,}5 \tag{6.39}$$

$$m_2 = 0 \qquad \text{for} \quad \bar{\lambda}_F \le 0{,}5 \tag{6.40}$$

For cases a) and b) in Figure 6.4, l_y should be obtained using

$$l_y = s_s + 2t_f\left(1 + \sqrt{m_1 + m_2}\right) \tag{6.41}$$

but l_y should not exceed the distance between adjacent transverse stiffeners.

For case c) l_y should be obtained as the smaller of the values given by Equations (6.42) and (6.43). In Equation (6.44), s_s should be taken as zero if the structure that introduces the force does not follow the slope of the girder, see Figure 6.5.

$$l_y = l_e + t_f\left[\sqrt{\frac{m_1}{2} + \left(\frac{l_e}{t_f}\right)^2 + m_2}\right] \tag{6.42}$$

$$l_y = l_e + t_f\sqrt{m_1 + m_2} \tag{6.43}$$

where l_e is given by:

$$l_e = \frac{k_F E t_w^2}{2 f_{yw} h_w} \leq s_s + c \tag{6.44}$$

Effective length of resistance

The effective length of resistance should be obtained from:

$$L_{eff} = \chi_F l_y \tag{6.45}$$

with

$$\chi_F = \frac{0,5}{\bar{\lambda}_F} \leq 1,0 \tag{6.46}$$

$$\bar{\lambda}_F = \sqrt{\frac{l_y t_w f_{yw}}{F_{cr}}} \tag{6.47}$$

$$F_{cr} = 0,9 k_F E \frac{t_w^3}{h_w} \tag{6.48}$$

where:

k_F is the buckling coefficient for different types of force application (Figure 6.4).

It should be noted that in order to calculate m_2, a value of $\bar{\lambda}_F$ needs to be assumed. Once the value of $\bar{\lambda}_F$ has been calculated, the value of m_2 may need to be recalculated.

6.4.5 Transverse stiffeners

Transverse stiffeners at supports and at other positions where significant external forces are applied should preferably be double-sided and symmetric about the centreline of the web. These stiffeners should be checked for cross-section crushing and buckling. Intermediate stiffeners not subject to external forces need only be checked for buckling.

The effective cross-section to use in the buckling check should include a width of web plate as shown in Figure 6.6. At the end of a member (or at the openings in the web) the width of web included in the cross-section should not exceed that available.

Figure 6.6 Effective cross-section of stiffeners for buckling

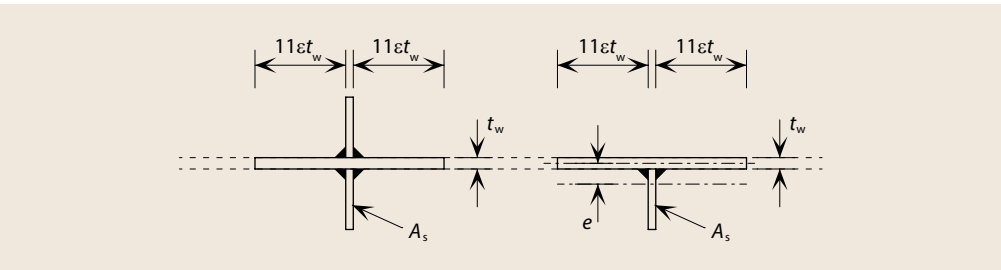

The out-of-plane buckling resistance $N_{b,Rd}$ of the stiffener should be determined from Section 6.3.3 using $\alpha = 0{,}49$ and $\bar{\lambda}_0 = 0{,}2$. The buckling length l of the stiffener should be appropriate for the conditions of restraint, but not less than $0{,}75\ h_w$, where both ends are fixed laterally. A larger value of l should be used for conditions that provide less end restraint. The torsional buckling resistance of the cruciform section should also be checked.

For single-sided or other asymmetric stiffeners the resulting eccentricity should be allowed for in accordance with Section 6.5.2.

At supports or at intermediate positions where significant loads are applied, the buckling resistance should exceed the reaction or load. At other intermediate positions, the compression force N_{Ed} in the stiffener may be obtained from:

$$N_{Ed} = V_{Ed} - \frac{1}{\bar{\lambda}_w^{\,2}} \frac{f_{yw}\, h_w\, t_w}{\sqrt{3}\,\gamma_{M1}} \tag{6.49}$$

where:

V_{Ed} is the design shear force in the member.

The above expression should be calculated assuming the stiffener under consideration is removed.

The second moment of area of an intermediate stiffener, I_{st}, should satisfy the following:

$$\frac{a}{h_w} < \sqrt{2}, \qquad I_{st} \geq \frac{1{,}5\, h_w^3\, t^3}{a^2} \tag{6.50}$$

$$\frac{a}{h_w} \geq \sqrt{2}, \qquad I_{st} \geq 0{,}75\, h_w\, t^3 \tag{6.51}$$

6.4.6 Determination of deflections

Deflections should be determined for the load combination at the relevant Serviceability Limit State.

The deflection of elastic beams (i.e. those not containing a plastic hinge) may be estimated by standard structural theory, except that the secant modulus of elasticity should be used instead of the modulus of elasticity. The value of the secant modulus varies with the stress level in the beam and may be obtained as follows:

$$E_S = \frac{(E_{S1} + E_{S2})}{2} \tag{6.52}$$

where:

E_{S1} is the secant modulus corresponding to the stress in the tension flange

E_{S2} is the secant modulus corresponding to the stress in the compression flange.

Values of the secant moduli E_{S1} and E_{S2} for the appropriate serviceability design stress can be estimated as follows:

$$E_{S,i} = \frac{E}{1 + 0,002 \frac{E}{\sigma_{i,Ed,ser}} \left(\frac{\sigma_{i,Ed,ser}}{f_y} \right)^n} \qquad \text{and } i = 1,2 \qquad (6.53)$$

where:

$\sigma_{i,Ed,ser}$ is the serviceability design stress in the tension or compression flange

E is the modulus of elasticity = 200×10^3 N/mm^2

n is the Ramberg Osgood parameter.

n is derived from the stress at the limit of proportionality and hence is a measure of the non-linearity of the stress-strain curve, with lower values indicating a greater degree of non-linearity. Values for n depend on the stainless steel group, processing/fabrication route, level of cold work and direction of loading (tension or compression). There is a large variation in measured values. Recommended values are given in Table 6.4.

Table 6.4 Values of n to be used for determining secant modul

Steel Grades	Coefficient n
Ferritic	14
Austenitic	7
Duplex	8

EN 1993-1-4 currently gives values for n which depend on grade and the orientation to the rolling direction (Table 6.5). Note that the values for duplex were based on very few data and are now understood to be too low. It is expected that the values in this table will be replaced by those in Table 6.4 in the next revision of EN 1993-1-4.

Table 6.5 Values of n to be used for determining secant modul

Type	Grade	Coefficient n	
		Longitudinal direction	Transverse direction
Ferritic	1.4003	7	11
	1.4016	6	14
	1.4512	9	16
Austenitic	1.4301, 1.4306, 1.4307, 1.4318, 1.4541	6	8
	1.4401, 1.4404, 1.4432, 1.4435, 1.4539, 1.4571,	7	9
Duplex	1.4462, 1.4362	5	5

Note: If the orientation of the member is not known, or cannot be ensured, then it is conservative to use the value for the longitudinal direction.

The non-linear stainless steel stress-strain relationship means that the modulus of elasticity varies within the cross-section and along the length of a member. Hence complex, non-linear procedures are required for the accurate determination of deflections in stainless steel beams. As a simplification, the variation of E_S along the length of the member may be neglected and the minimum value of E_S for that member (corresponding to the maximum values of the stresses σ_1 and σ_2 in the member) may be used throughout its length. Note that this method is accurate for predicting deflections when the secant modulus is based on the maximum

stress in the member and this maximum stress does not exceed 65% of the 0.2% proof strength. At higher levels of stress, the method becomes very conservative and a more accurate method (e.g. one which involves integrating along the length of the member) should be used.

In the case of Class 4 cross-sections and/or members subject to shear lag, an effective section should be used in the calculations. As a first estimate, it is appropriate to use the effective section based on the effective widths established in Sections 5.4.1 and/or 5.4.2. As a refinement, it is possible to use an effective section based on the effective buckling widths determined for the actual stress in the elements by taking ε in Section 5.4.1 (but not in Section 5.4.2) as:

$$\varepsilon = \left[\frac{235}{\sigma} \frac{E}{210\,000} \right]^{0,5} \tag{6.54}$$

where:

σ is the actual stress in the element in the associated effective cross-section.

6.5 Members subject to combinations of axial load and bending moments

6.5.1 Axial tension and bending

Tension members with moments should be checked for resistance to lateral torsional buckling in accordance with Section 6.4.2 under the moment alone. Their resistance should also be checked under the combined effects of axial load and moment at the points of maximum bending moment and axial load. The following relationship should be satisfied:

$$\frac{N_{\mathrm{Ed}}}{N_{\mathrm{Rd}}} + \frac{M_{\mathrm{y,Ed}}}{M_{\mathrm{y,Rd}}} + \frac{M_{\mathrm{z,Ed}}}{M_{\mathrm{z,Rd}}} \leq 1 \tag{6.55}$$

where:

N_{Ed} is the design axial tensile load in the member at the critical location

N_{Rd} is the design resistance of the member in tension

$M_{\mathrm{y,Ed}}$ is the design moment about the major axis at the critical section

$M_{\mathrm{z,Ed}}$ is the design moment about the minor axis at the critical section

$M_{\mathrm{y,Rd}}$ is the design moment resistance about the major axis in the absence of axial load and includes any reduction that may be caused by shear effects (Section 5.7.4)

$M_{\mathrm{z,Rd}}$ is the design moment about the minor axis in the absence of axial load and includes any reduction that may be caused by shear effects (Section 5.7.4).

6.5.2 Axial compression and bending

In addition to satisfying the requirements of cross-sectional resistance (see Section 5.7.6) at every point along the length of the member and the general requirements for beams (see Section 6.4), interaction effects should be considered between compressive loads and bending moments.

Axial compression and uniaxial major axis moment

To prevent premature buckling about the major axis:

$$\frac{N_{\mathrm{Ed}}}{\left(N_{\mathrm{b,Rd}}\right)_{\min}}+k_{\mathrm{y}}\left(\frac{M_{\mathrm{y,Ed}}+N_{\mathrm{Ed}}e_{\mathrm{Ny}}}{\beta_{\mathrm{W,y}}W_{\mathrm{pl,y}}f_{y}/\gamma_{\mathrm{M1}}}\right)\leq 1 \tag{6.56}$$

To prevent premature buckling about the minor axis (for members subject to lateral-torsional buckling):

$$\frac{N_{\mathrm{Ed}}}{\left(N_{\mathrm{b,Rd}}\right)_{\mathrm{min1}}}+k_{\mathrm{LT}}\left(\frac{M_{\mathrm{y,Ed}}+N_{\mathrm{Ed}}e_{\mathrm{Ny}}}{M_{\mathrm{b,Rd}}}\right)\leq 1 \tag{6.57}$$

Axial compression and uniaxial minor axis moment

To prevent premature buckling about the minor axis:

$$\frac{N_{\mathrm{Ed}}}{\left(N_{\mathrm{b,Rd}}\right)_{\min}}+k_{z}\left(\frac{M_{\mathrm{z,Ed}}+N_{\mathrm{Ed}}e_{\mathrm{Nz}}}{\beta_{\mathrm{W,z}}W_{\mathrm{pl,z}}f_{y}/\gamma_{\mathrm{M1}}}\right)\leq 1 \tag{6.58}$$

Axial compression and biaxial moments

All members should satisfy:

$$\frac{N_{\mathrm{Ed}}}{\left(N_{\mathrm{b,Rd}}\right)_{\min}}+k_{\mathrm{y}}\left(\frac{M_{\mathrm{y,Ed}}+N_{\mathrm{Ed}}e_{\mathrm{Ny}}}{\beta_{\mathrm{W,y}}W_{\mathrm{pl,y}}f_{\mathrm{y}}/\gamma_{\mathrm{M1}}}\right)+k_{z}\left(\frac{M_{\mathrm{z,Ed}}+N_{\mathrm{Ed}}e_{\mathrm{Nz}}}{\beta_{\mathrm{W,z}}W_{\mathrm{pl,z}}f_{\mathrm{y}}/\gamma_{\mathrm{M1}}}\right)\leq 1 \tag{6.59}$$

Members potentially subject to lateral-torsional buckling should also satisfy:

$$\frac{N_{\mathrm{Ed}}}{\left(N_{\mathrm{b,Rd}}\right)_{\mathrm{min1}}}+k_{\mathrm{LT}}\left(\frac{M_{\mathrm{y,Ed}}+N_{\mathrm{Ed}}e_{\mathrm{Ny}}}{M_{\mathrm{b,Rd}}}\right)+k_{z}\left(\frac{M_{\mathrm{z,Ed}}+N_{\mathrm{Ed}}e_{\mathrm{Nz}}}{\beta_{\mathrm{W,z}}W_{\mathrm{pl,z}}f_{\mathrm{y}}/\gamma_{\mathrm{M1}}}\right)\leq 1 \tag{6.60}$$

In the above expressions:

e_{Ny} and e_{Nz} are the shifts in the neutral axes when the cross-section is subject to uniform compression

N_{Ed}, $M_{\mathrm{y,Ed}}$ and $M_{\mathrm{z,Ed}}$ are the design values of the compression force and the maximum moments about the *y-y* and *z-z* axis along the member, respectively

$(N_{\mathrm{b,Rd}})_{\min}$ is the smallest value of $N_{\mathrm{b,Rd}}$ for the following four buckling modes: flexural buckling about the *y* axis, flexural buckling about the *z* axis, torsional buckling and torsional-flexural buckling (see Sections 6.3.3. and 6.3.4)

$(N_{\mathrm{b,Rd}})_{\mathrm{min1}}$ is the smallest value of $N_{\mathrm{b,Rd}}$ for the following three buckling modes: flexural buckling about the *z* axis, torsional buckling and torsional-flexural buckling (see Sections 6.3.3 and 6.3.4)

$\beta_{\mathrm{W,y}}$ & $\beta_{\mathrm{W,z}}$ are the values of β_{W} determined for the *y* and *z* axes respectively in which

β_{W} = 1 for Class 1 or 2 cross-sections

= $W_{\mathrm{el}}/W_{\mathrm{pl}}$ for Class 3 cross-sections

= $W_{\mathrm{eff}}/W_{\mathrm{pl}}$ for Class 4 cross-sections

$W_{\mathrm{pl,y}}$ & $W_{\mathrm{pl,z}}$ are the plastic moduli for the y and z axes respectively

$M_{\mathrm{b,Rd}}$ is the lateral-torsional buckling resistance (see Section 6.4.2).

The interaction factors k_y, k_z and k_{LT} for open cross-sections can be calculated as follows:

$$k_y = 1,0 + 2\left(\bar{\lambda}_y - 0,5\right)\frac{N_{Ed}}{N_{b,Rd,y}} \qquad \text{but} \quad 1,2 \le k_y \le 1,2 + 2\frac{N_{Ed}}{N_{b,Rd,y}} \tag{6.61}$$

$$k_z = 1,0 + 2\left(\bar{\lambda}_z - 0,5\right)\frac{N_{Ed}}{\left(N_{b,Rd}\right)_{min1}} \qquad \text{but} \quad 1,2 \le k_z \le 1,2 + 2\frac{N_{Ed}}{\left(N_{b,Rd}\right)_{min1}} \tag{6.62}$$

$$k_{LT} = 1,0$$

The interaction factors k_y and k_z for rectangular and circular hollow sections cross-sections can be calculated as follows:

$$k_y = 1 + D_1\left(\bar{\lambda}_y - D_2\right)\frac{N_{Ed}}{N_{b,Rd,y}} \le 1 + D_1\left(D_3 - D_2\right)\frac{N_{Ed}}{N_{b,Rd,y}} \tag{6.63}$$

$$k_z = 1 + D_1\left(\bar{\lambda}_z - D_2\right)\frac{N_{Ed}}{\left(N_{b,Rd,y}\right)_{min1}} \le 1 + D_1\left(D_3 - D_2\right)\frac{N_{Ed}}{\left(N_{b,Rd,y}\right)_{min1}} \tag{6.64}$$

Where values for D_1, D_2 and D_3 are given in Table 6.6.

Table 6.6 Values for D_1, D_2 and D_3

Cross-section	Grade	D_1	D_2	D_3
RHS	Ferritic	1,3	0,45	1,6
	Austenitic	2,0	0,30	1,3
	Duplex	1,5	0,40	1,4
CHS	Ferritic	1,9	0,35	1,3
	Austenitic	2,5	0,30	1,3
	Duplex	2,0	0,38	1,3

EN 1993-1-4 currently only gives Equations (6.61) and (6.62). Because these give very conservative values when applied to hollow sections, it is expected that the next revision of EN 1993-1-4 will include the new expressions in (6.63) and (6.64) also.

Note that the National Annexes may give other interaction formulae as alternatives to the above equations. The UK National Annex does not give any alternatives.

For angles, the *y* and *z* axes in the above should be taken as the *u* and *v* axes respectively.

JOINT DESIGN

7.1 General recommendations

7.1.1 Durability

The design of joints, in particular, needs the most careful attention to maintain optimum corrosion resistance. This is especially so for joints that may become wet from either the weather, spray, immersion, or condensation, etc. The possibility of avoiding or reducing associated corrosion problems by locating joints away from the source of dampness should be investigated. Alternatively, it may be possible to remove the source of dampness; for instance, in the case of condensation, by adequate ventilation or by ensuring that the ambient temperature within the structure lies above the dew point temperature.

Where it is not possible to prevent a joint involving carbon steel and stainless steel from becoming wet, consideration should be given to preventing bimetallic corrosion, see Section 3.2.3. The use of carbon steel bolts with stainless steel structural elements should always be avoided. In bolted joints that would be prone to an unacceptable degree of corrosion, provision should be made to isolate electrically the carbon steel and stainless steel elements. This entails the use of insulating washers and possibly bushes; typical suitable details are shown in Figure 7.1 for bolts installed in the snug-tight condition. The insulating washers and bushings should be made of a thermoset polymer such as neoprene (synthetic rubber), which is flexible enough to seal the joint when adequate pressure is applied and long lasting to provide permanent metal separation. Sealing the joint is important to prevent moisture infiltration which would lead to crevice corrosion. Note also that the insulating washer should not extend beyond the stainless steel washer in case a crevice is created. In atmospheric conditions with chloride exposure, an additional strategy to protect against crevice corrosion is to insert an insulating, flexible washer directly under the bolt head, or to cover the area with clear silicone sealant.

With respect to welded joints involving carbon and stainless steels, it is generally recommended that any paint system applied to the carbon steel should extend over the weldment onto the stainless steel up to a distance of about 75 mm.

Care should be taken in selecting appropriate materials for the environment to avoid crevice corrosion in bolted joints (see Section 3.2.2).

Figure 7.1
Typical detail for connecting dissimilar materials (to avoid bimetallic corrosion)

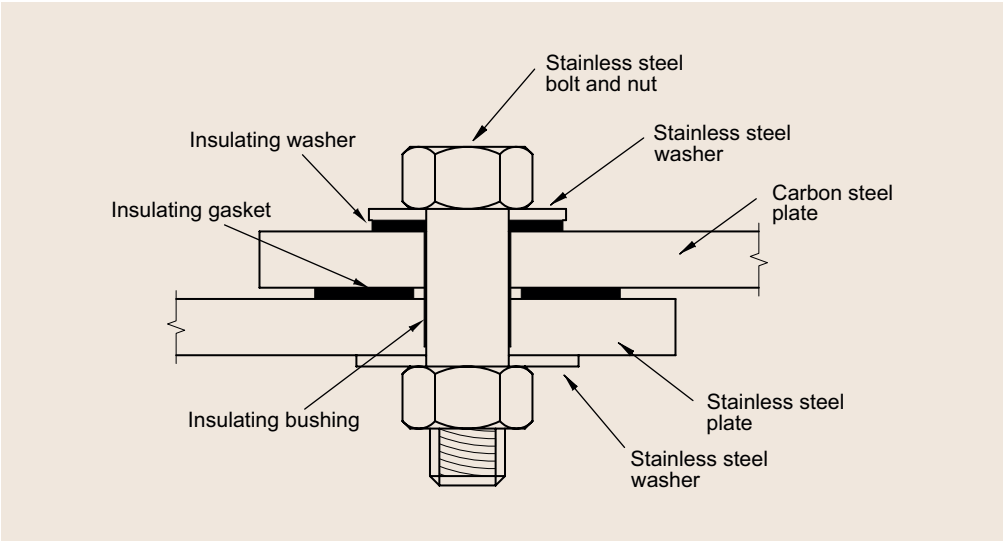

7.1.2 Design assumptions

Joints may be designed by distributing the internal forces and moments in a realistic manner, bearing in mind the relative stiffness of elements that make up the joint. The internal forces and moments must be in equilibrium with the applied forces and moments. Each element participating in the assumed load paths should be capable of resisting the forces assumed in the analysis and at the implied deformation within the element's deformation capacity.

7.1.3 Intersections and splices

Members meeting at a joint should normally be arranged with their centroidal axes intersecting at a point. Where there is eccentricity at intersections, the members and connections should be designed to accommodate the resulting moments. In the case of joints with angles or tees connected by at least two bolts at each joint, the setting out lines for the bolts in the angles and tees may be substituted for the centroidal axes for the purpose of determining the intersection at the joints.

Splices in beams should preferably be located as near as possible to points of contraflexure (zero bending moment). In column splices, consideration should be given to moments caused by P-δ effects.

7.1.4 Other general considerations

Where a joint is subject to impact, vibration, or frequent reversal of significant stress, welding is the preferred method of joining. These connections should be checked for the effects of fatigue (see Section 9).

Ease of fabrication and erection are factors to be considered in the design of all joints and splices. Attention should be paid to:

- use of standardised details
- the clearances necessary for safe erection

- the clearances needed for tightening fasteners,
- the need for access for welding,
- the requirements of welding procedures,
- the effects of angular and length tolerances on fit-up.

It should be noted that greater welding distortions will be associated with the austenitic stainless steels than with carbon steels (see Section 11.6.4). Attention should also be paid to the requirements for subsequent inspection and maintenance.

7.2 Bolted connections

7.2.1 General

The recommendations in this Section apply to connections with bolts in clearance holes where shear, tension or a combination of shear and tension is to be carried. The rules apply to connections made with bolts of property classes 50, 70 and 80. The resistance of connections with property class 100 bolts should be confirmed by testing. It is good practice to provide washers under both the bolt head and the nut. Guidance on appropriate materials for bolts and nuts is given in Sections 2.3 and 11.7.

Shear forces are transferred by bearing between the bolts and the connected parts. No recommendations are given for connections in which shear is transferred by frictional resistance, but see Section 7.2.2.

The strength of a connection is to be taken as the lesser of the strength of the connected parts (see Section 7.2.3) and that of the fasteners (see Section 7.2.4).

To restrict irreversible deformation in bolted connections, the stresses in bolts and net cross-sections at bolt holes under the characteristic load combinations should be limited to the yield strength.

7.2.2 Preloaded bolts

Historically there have been concerns about the use of stainless steel preloaded bolted connections because of a lack of knowledge about:

- appropriate preloading methods, especially to avoid galling,
- the impact of the time-dependent stress relaxation characteristics of stainless steel on the performance of a preloaded connection,
- slip factors for stainless steel faying surfaces.

Ongoing research under the EU RFCS project SIROCO is studying the performance of stainless steel preloaded connections and has provided important data which challenges these perceptions. The extensive programme of tests on stainless steel bolted assemblies shows:

- austenitic and duplex stainless steel bolts can be satisfactorily preloaded providing the correct bolt grade, tightening method and lubricant are used,

- the loss in preload which occurs in a stainless steel bolted assembly is comparable to that which occurs in a carbon steel bolted assembly,
- slip factors measured on grit blasted stainless steel surfaces were consistently at least equivalent to Class B (0,4).

The final recommendations from SIROCO will be available from the EU Bookshop https://publications.europa.eu/en/web/general-publications/publications towards the end of 2018 and are expected to be introduced into the next revisions of EN 1993-1-4 and EN 1090-2. In the meantime, physical testing should be undertaken to demonstrate the acceptability of a stainless steel preloaded connection.

7.2.3 Connected parts

Holes

Holes can be formed by drilling or punching. However, the cold working associated with punching may increase the susceptibility to corrosion and therefore punched holes are less suitable in aggressive environments (e.g. heavy industrial and marine environments).

The maximum clearances in standard holes are:

- 1 mm for M12 and M14 bolts (M14 is non standard size)
- 2 mm for M16 to M24 bolts
- 3 mm for M27 and larger bolts.

Position of holes

Edge distance is defined as the distance from the centre of a hole to the adjacent edge of the connecting part at right angles to the direction of stress; end distance is similarly defined but in the direction in which the fastener bears.

The minimum value of the end distance, e_1, or that of the edge distance, e_2, (see Figure 7.2) should be taken as $1{,}2\,d_0$, where d_0 is the diameter of the bolt hole. Note that the end distance may need to be larger than this to provide adequate bearing resistance, see below.

The maximum value of the end or edge distance should be restricted to $4t + 40$ mm, where t is the thickness (in mm) of the thinner outer ply.

The minimum centre-to-centre bolt spacing is $2{,}2\,d_0$ in the direction of stress, p_1, (see Figure 7.2). The corresponding minimum spacing, p_2, normal to the direction of stress is $2{,}4\,d_0$.

The maximum spacing of bolts in any direction should be such that local compressive buckling of the plies is taken into account, see EN 1993-1-8.

For staggered bolt rows, a minimum line spacing $p_2 = 1{,}2\,d_0$ may be used if the minimum distance, L, between any two fasteners in a staggered row is greater or equal to $2{,}4\,d_0$, see Figure 7.2.

Figure 7.2
Symbols for defining position of holes

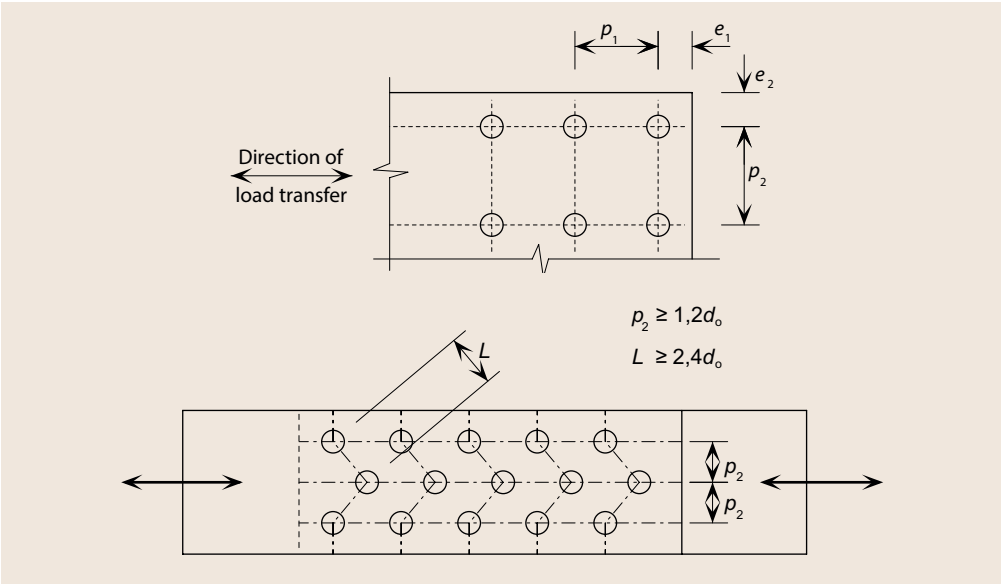

Bearing resistance

The bearing resistance of bolted stainless steel connections should be determined either on the basis of a strength or a deformation criterion. The design resistance for bolted connections susceptible to bearing failure $F_{b,Rd}$ is given by:

$$F_{b,Rd} = \frac{2{,}5\,\alpha_b\, k_t\, t\, d\, f_u}{\gamma_{M2}} \tag{7.1}$$

where:

α_b	is the bearing coefficient in the direction of load transfer
k_t	is the bearing coefficient in the direction perpendicular to load transfer
d	is the bolt diameter
t	is the thickness of the connected plate
f_u	is the characteristic ultimate strength of the connected plates (Table 2.2).

Bolted connections are classified into two groups, based on the thickness of the connected plates. Thick plate connections are those between plates with thicknesses greater than 4 mm, while connections between plates with thicknesses not exceeding 4 mm are defined as thin plate connections.

Bearing coefficients of thick plate connections

For connections composed of thick plates, when deformation is not a key design consideration, the bearing coefficient α_b in the load transfer direction is determined from Equation (7.2), while the bearing coefficient k_t in the direction perpendicular to load transfer is determined from Equation (7.3).

$$\alpha_b = \min\left\{1{,}0,\ \frac{e_1}{3d_0}\right\} \tag{7.2}$$

$$k_t = \begin{cases} 1{,}0 & \text{for} \left(\dfrac{e_2}{d_0}\right) > 1{,}5 \\ 0{,}8 & \text{for} \left(\dfrac{e_2}{d_0}\right) \le 1{,}5 \end{cases} \tag{7.3}$$

For connections composed of thick plates, when deformation is a key design consideration, the bearing coefficient α_b is determined from Equation (7.4) and $k_t = 0{,}5$.

$$\alpha_b = \min\left\{1{,}0,\ \frac{e_1}{2d_0}\right\} \tag{7.4}$$

Bearing coefficients of thin plate connections

For connections composed of thin plates, when deformation is not a key design consideration, the bearing coefficients α_b and k_t for the inner sheets in double shear connections are equal to those defined by Equations (7.2) and (7.3) for thick plate connections.

For connections composed of thin plates, when deformation is not a key design consideration, for single shear connections and outer sheets in double shear connections the bearing coefficient α_b is determined from Equation (7.4) and $k_t = 0{,}64$.

For connections composed of thin plates, when deformation is a key design consideration, the bearing coefficient α_b is determined from (7.4) and $k_t = 0{,}5$.

It is expected that in the next revision of EN 1993-1-4, these design rules for determining bearing resistance will replace the more conservative rules currently given, which follow the carbon steel rules in EN 1993-1-8, using a reduced value of ultimate strength $f_{u,red}$ in place of f_u where:

$$f_{u,red} = 0{,}5 f_y + 0{,}6 f_u \tag{7.5}$$

The resistance of a group of fasteners may be determined as the sum of the bearing resistances $F_{b,Rd}$ of the individual fasteners provided that the design shear resistance $F_{v,Rd}$ of each individual fastener is greater or equal to the design bearing resistance $F_{b,Rd}$. Otherwise the resistance of a group of fasteners should be determined by using the smallest resistance of the individual fasteners multiplied by the number of fasteners.

Tension resistance

The tensile resistance of the connected part should be based on the lesser of:

a) the plastic resistance of the gross cross-section

$$N_{pl,Rd} = \frac{A f_y}{\gamma_{M0}} \tag{7.6}$$

b) the ultimate resistance of the net cross-section at holes for fasteners

$$N_{u,Rd} = \frac{k\, A_{net}\, f_u}{\gamma_{M2}} \tag{7.7}$$

where the terms are defined in Section 5.7.2.

If ductile behaviour is required, then the plastic resistance of the gross section must be less than the net section ultimate resistance. Requirements for ductility and rotation capacity are given in EN 1993-1-8. Requirements for seismic design are given in EN 1998.

Design for block tearing

The guidance in EN 1993-1-8 is applicable.

Angles connected by one leg and other unsymmetrically connected members in tension

The eccentricity of fasteners in end connections and the effects of the spacing and edge distances of the bolts should be taken into account in determining the design resistance of unsymmetrical members, as well as of symmetrical members that are connected unsymmetrically, such as angles connected by one leg.

Angles connected by a single row of bolts in one leg may be treated as concentrically loaded and the design ultimate resistance of the net section determined as follows:

With 1 bolt: $$N_{u,Rd} = \frac{2{,}0\left(e_2 - 0{,}5 d_0\right) t\, f_u}{\gamma_{M2}} \tag{7.8}$$

With 2 bolts: $$N_{u,Rd} = \frac{\beta_2\, A_{net}\, f_u}{\gamma_{M2}} \tag{7.9}$$

With three or more bolts: $$N_{u,Rd} = \frac{\beta_3\, A_{net}\, f_u}{\gamma_{M2}} \tag{7.10}$$

where:

β_2 and β_3 are reduction factors dependent on the pitch p_1 as given in Table 7.1. For intermediate values of p_1 the value of β can be determined by linear interpolation.

A_{net} is the net area of the angle. For an unequal-leg angle connected by its smaller leg A_{net} should be taken as equal to the net section area of an equivalent equal-leg angle of leg size equal to that of the smaller leg.

Table 7.1 Reduction factors β_2 and β_3

Connection	Factor	Pitch, p_1	
		$\leq 2{,}5\, d_0$	$\geq 5{,}0\, d_0$
2 bolts	β_2	0,4	0,7
3 bolts or more	β_3	0,5	0,7

7.2.4 Fasteners

Net areas

The area of the bolt to be used in calculations for bolts in tension should be taken as the tensile stress area, as defined in the appropriate product standard.

For bolts in shear, the greater shank area may be used if it can be guaranteed that the threaded portion will be excluded from the shear plane; consideration should be given to the possibility that bolts may be inserted from either direction. If no such guarantee can be given, the tensile stress area should be used.

Shear resistance

The shear resistance of a bolted connection is dependent on the number of shear planes and their position along the bolt. For each shear plane, the shear resistance in the absence of tension may be determined as follows:

$$F_{\mathrm{v,Rd}} = \frac{\alpha f_{\mathrm{ub}} A}{\gamma_{\mathrm{M2}}} \tag{7.11}$$

where:

A is the gross cross-section area of the bolt (if the shear plane passes through unthreaded portion of the bolt); or the tensile stress area of the bolt (if the shear plane passes through the threaded portion of the bolt)

f_{ub} is the tensile strength of the bolt (Table 2.6).

The value of α may be defined in the National Annex. The recommended value is 0,6, which applies if the shear plane passes through the unthreaded or threaded portions of the bolt.

There is an error in EN 1993-1-4 regarding the recommended value of α if the shear plane passes through the threaded portion of the bolt. The value given is $\alpha = 0{,}5$ but it is expected to be increased to $\alpha = 0{,}6$ in the next revision of EN 1993-1-4.

Tensile resistance

The tension resistance of a bolt is given by $F_{\mathrm{t,Rd}}$:

$$F_{\mathrm{t,Rd}} = \frac{k_2 f_{\mathrm{ub}} A_{\mathrm{s}}}{\gamma_{\mathrm{M2}}} \tag{7.12}$$

where:

$k_2 = 0{,}63$ for countersunk bolts, otherwise $k_2 = 0{,}9$.

Where fasteners are required to carry an applied tensile force, they should be proportioned to resist the additional force due to prying action, where this can occur. Guidance on accounting for prying forces is given in EN 1993-1-8.

Combined shear and tension

When a bolt is simultaneously subjected to a shear force, $F_{v,Ed}$, and a tensile force (including prying effects), $F_{t,Ed}$, interaction effects should be considered. This may be accounted for by satisfying the following interaction relationship:

$$\frac{F_{v,Ed}}{F_{v,Rd}} + \frac{F_{t,Ed}}{1,4\,F_{t,Rd}} \leq 1,0 \qquad (7.13)$$

Note that the design tensile force (including any force due to prying action) must also be less than the tensile resistance.

Long joints and large grip lengths

For splices of unusual length (say 500 mm or 15 bolt diameters upwards) or when the grip length (i.e. the total thickness of the connected plies) exceeds 5 bolt diameters, the shear resistance should be reduced. In the absence of data for stainless steel, it is recommended to consult carbon steel rules for these situations in EN 1993-1-8.

7.3 Mechanical fasteners for thin gauge material

The design of connections for stainless steel sheets using self-tapping screws can be calculated in accordance with EN 1993-1-3, except that the pull-out strength should be determined by testing. In order to avoid seizure of the screw or stripping its thread, the ability of the screw to drill and form threads in stainless steel should be demonstrated by tests unless sufficient experience is available.

7.4 Welded connections

7.4.1 General

The heating and cooling cycle involved in welding affects the microstructure of all stainless steels, and this is of particular importance for duplex stainless steels. It is essential that suitable welding procedures and compatible consumables are used and that qualified welders undertake the work. Guidance on this matter is given in Section 11.6. This is important not only to ensure the strength of the weld and to achieve a defined weld profile but also to maintain corrosion resistance of the weld and surrounding material.

The following recommendations apply to full and partial penetration butt welds and to fillet welds made by an arc welding process such as:

Process Number	*Process Name*
111	Metal-arc welding with covered electrode (manual metal arc welding)
121	Submerged arc welding with wire electrode
122	Submerged arc welding with strip electrode
131	Metal-arc inert gas welding (MIG welding)
135	Metal-arc active gas welding (MAG welding)
137	Flux-cored wire metal-arc welding with inert gas shield
141	Tungsten inert gas welding (TIG welding)
15	Plasma arc welding

(Process numbers are as defined in EN ISO 4063.)

Compatible consumables should be used, such that the specified yield strength, tensile strength, elongation at failure and minimum Charpy V-notch energy value of the filler metal should be equivalent to, or better than that specified for the parent material. However, for austenitic stainless steel in the cold worked condition, the filler metal may have lower nominal strength than the parent material (Section 7.4.4). Table 7.2 gives suitable welding consumables for different grades.

For welding stainless steel to carbon steel, the filler metal should be over-alloyed to ensure adequate mechanical properties and corrosion resistance of the joint. Over-alloying avoids dilution of the joined elements in the fusion zone of the base stainless steel. When welding stainless steel to galvanized steel, the zinc coating around the area to be joined needs to be removed before welding. The inclusion of zinc can result in embrittlement or reduced corrosion resistance of the finished weld and the fumes given off when attempting to weld through the galvanized layer are a significant health hazard. Once the galvanizing has been removed, welding requirements are as for welding stainless steel to ordinary carbon steel.

Table 7.2 Examples of suitable steel grades and welding consumables

Parent material		Welding consumables	
Group	**Grade**	**EN ISO 3581:2012** Welding consumables. Covered electrodes for manual metal arc welding of stainless and heat-resisting steels. Classification	**EN ISO 14343:2009** Welding consumables. Wire electrodes, strip electrodes, wires and rods for arc welding of stainless and heat resisting steels. Classification
Austenitic	1.4301, 1.4307, 1.4318	19 9 L	
	1.4541	19 9 L or 19 9 Nb	
	1.4401, 1.4404	19 12 3 L	
	1.4571	19 12 3 L or 19 12 3 Nb	
Duplex	1.4482, 1.4162, 1.4362, 1.4062	23 7 N L or 22 9 3 N L	
	1.4062	23 7 N L or 22 9 3 N L	
	1.4662, 1.4462	22 9 3 N L	
Ferritic	1.4003	13 or 19 9 L	
	1.4016	19 9 L or 23 12 L	
	1.4509	19 9 Nb or 18 8 Mn	
	1.4521	19 12 3 L or 23 12 2L	

The austenitic welding consumables have a minimum 0,2% proof strength of about 320-350 N/mm^2 and tensile strength of 510-550 N/mm^2.

The duplex welding consumables have a minimum 0,2% proof strength of about 450 N/mm^2 and tensile strength of 550 N/mm^2.

Manufacturers of stainless steel and consumables may help in the selection of appropriate consumables. The weld metal should be at least as noble as the parent material.

Intermittent fillet welds and intermittent partial penetration butt welds are best avoided in all but the mildest of environments, to reduce the possibility of corrosion. Furthermore, intermittent butt welds should be used with care in marine or very heavily polluted onshore environments, particularly where water flow induced by surface tension may occur.

7.4.2 Fillet welds

Application

Fillet welds may be used for connecting parts where fusion faces form an angle of between 60° to 120°. For angles smaller than 60°, fillet welds may be used but should be considered as partial penetration butt welds for design purposes. For angles over 120°, fillet welds should not be relied upon to transmit forces.

A fillet weld should not be used in situations which produce a bending moment about the longitudinal axis of the weld if this causes tension at the root of the weld.

Effective length and throat size

The effective length of a fillet weld may be taken as the overall length of the full size fillet. However, welds with effective lengths shorter than 40 mm or 6 times the throat thickness, should not be relied upon to transmit forces.

The effective throat thickness, a, of a fillet weld should be taken as the height of the largest triangle (with equal or unequal legs) that can be inscribed within the fusion faces and the weld surface, measured perpendicular to the outer side of this triangle, see Figure 7.3. Advantage may be taken of the additional throat thickness of deep penetration fillet welds, see Figure 7.4, provided that preliminary tests show that the required penetration can consistently be achieved.

Figure 7.3
Fillet weld throat thickness

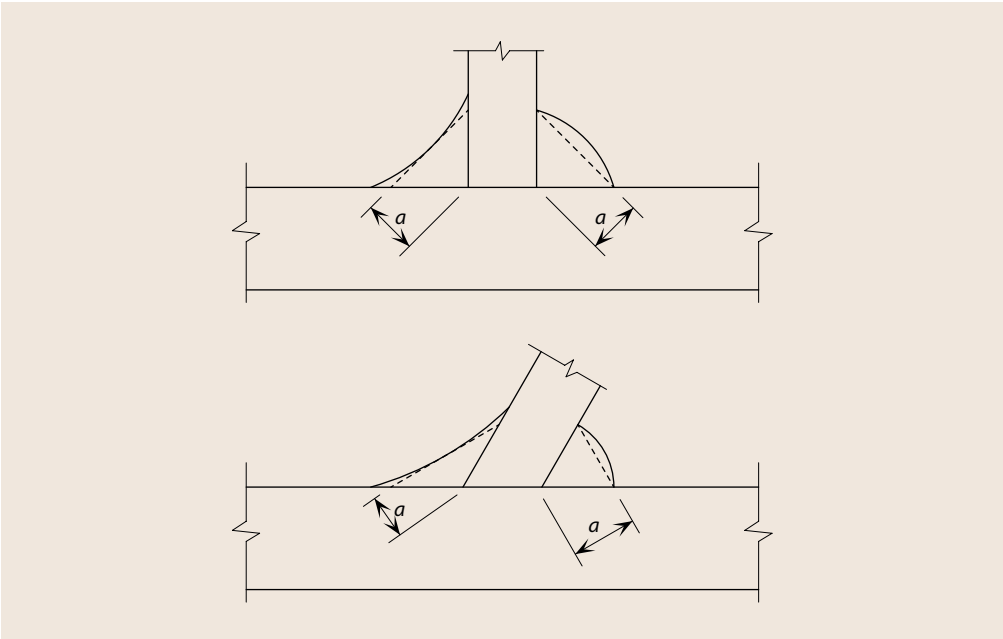

Figure 7.4
Deep penetration fillet weld throat thickness

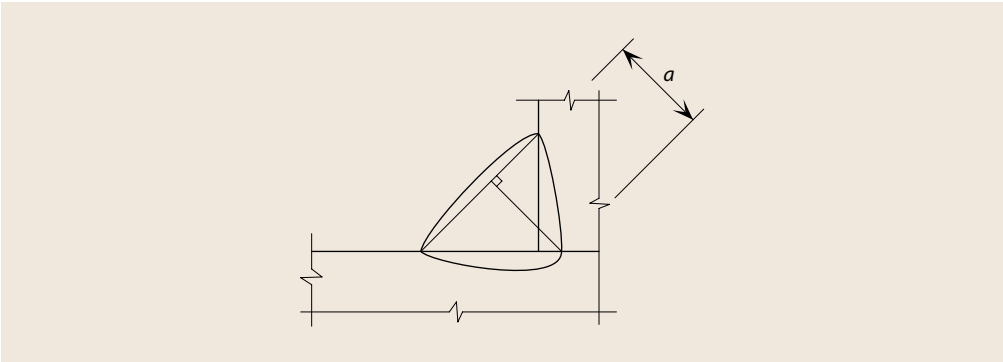

Design stress and design shear strength

The design stress is obtained as the vector sum of the stresses due to all forces and moments transmitted by the weld. The design stress is calculated for the effective length and throat thickness (see above).

The design resistance of the fillet weld will be sufficient if the following are both satisfied:

$$\left[\sigma_{\perp}^{2}+3\left(\tau_{\perp}^{2}+\tau_{\parallel}^{2}\right)\right]^{0,5} \leq \frac{f_{u}}{\beta_{w}\gamma_{M2}} \tag{7.14}$$

$$\sigma_{\perp} \leq \frac{0,9 f_{u}}{\gamma_{M2}} \tag{7.15}$$

where:

$\sigma_{\perp}$	is the normal stress perpendicular to the throat
$\tau_{\perp}$	is the shear stress (in the plane of the throat) perpendicular to the axis of the weld
$\tau_{\parallel}$	is the shear stress (in the plane of the throat) parallel to the axis of the weld
f_u	is the nominal ultimate strength of the weaker part joined
β_w	is taken as 1,0 for all nominal strength classes of stainless steel, unless a lower value is justified by tests.

Alternatively, the Simplified method in 4.5.3.3 of EN 1993-1-8 can be used to calculate the design resistance of a fillet weld.

7.4.3 Butt welds

Full penetration butt welds

The design resistance of a full penetration butt weld should be taken as equal to the design resistance of the weaker of the parts joined, provided that the weld satisfies the recommendations of Section 7.4.1.

Partial penetration butt welds

Partial penetration butt welds may be used to transmit shear forces. They are not recommended in situations where they would be subjected to tension.

The resistance of a partial penetration butt weld may be determined as for a deep penetration fillet weld. The throat thickness of a partial penetration butt weld may be taken as the depth of penetration that can be consistently achieved, as determined by procedure trials. In the absence of procedure trials, the throat thickness can be assumed to be the depth of preparation less 3 mm.

7.4.4 Welding cold worked stainless steel

In general, the same principles apply to welding stainless steel in the cold worked condition as to welding annealed stainless steel. However, the resistance of the parent material in the heat affected zones of butt welds should be taken as the ultimate strength of the annealed parent material.

The filler metal may have lower nominal strength than the parent material, in which case the design resistance of fillet and butt welds should be based on the nominal ultimate strength of the weld consumable with β_w taken as 1,0 (Table 7.2).

In general, austenitic weld consumables should be used for welding stainless steels in the cold worked condition. Duplex weld consumables may also be used, provided the mechanical properties of the joint are verified by tests.

In welded joints of cold worked material, annealing of the heat-affected zones may be incomplete, and the actual strength of joints may be higher than those calculated on the basis of full annealing. Under these circumstances, it may be possible to establish higher design properties by carrying out tests.

DESIGN FOR FIRE RESISTANCE

8.1 General

This Section deals with the design of stainless steel structures that, for reasons of general fire safety, are required to fulfil certain functions, in terms of avoiding premature collapse of the structure (load-bearing function), when exposed to fire. The recommendations are only concerned with passive methods of fire protection and are applicable to stainless steel grades and structures that are generally designed within the rules of Sections 4 to 7 of this document.

Austenitic stainless steels generally retain a higher proportion of their room temperature strength than carbon steel above temperatures of about 550°C. All stainless steels retain a higher proportion of their stiffness than carbon steel over the entire temperature range.

EN 1991-1-2 gives the thermal and mechanical actions on structures exposed to fire. Fire is designated an accidental design situation in the Eurocodes. EN 1990 gives combinations of actions for accidental design situations, and recommends that the partial factors for actions are taken as 1,0. EN 1993-1-2 recommends that the partial material safety factor $\gamma_{M,fi}$ for the fire situation should be taken as 1,0. This value is also adopted in the UK National Annex to EN 1993-1-2.

The performance requirements of a stainless steel structure that may be subjected to accidental fire loading are no different to those of carbon steel, namely:

- Where mechanical resistance in the case of fire is required, the structure should be designed and constructed in such a way that it maintains its load-bearing function during the relevant fire exposure.
- Deformation criteria should be applied where the means of fire protection, or the design criteria for separating elements, require the deformation of the load-bearing structure to be considered. However, it is not necessary to consider the deformation of the load-bearing structure if the fire resistance of the separating elements is based on the standard fire curve.

8.2 Mechanical properties at elevated temperatures

EN 1993-1-2:2005 gives eight sets of strength reduction factors for different grades of stainless steel, compared to a single set for carbon steel. A number of sets of reduction factors is appropriate for stainless steel since the elevated temperature properties can vary markedly between grades due to their different chemical composition. In the next revision of EN 1993-1-2, it is expected that stainless steels with similar elevated temperature properties will be put into groups and reduction factors which apply to these groups will be introduced, replacing the individual grade-specific data. These generic reduction factors are given in this Section.

Table 8.1 gives strength and stiffness reduction factors, relative to the appropriate value at 20°C, for the stress-strain relationship for seven groups of stainless steels at elevated temperatures. The factors are defined below:

$k_{p0,2,\theta}$ is the 0,2% proof strength at temperature θ relative to the design strength at 20°C, i.e.:

$$k_{p0,2,\theta} = f_{p0,2,\theta}/f_y \tag{8.1}$$

$k_{2,\theta}$ is the strength at 2% total strain at temperature θ relative to the design strength at 20°C, i.e.:

$$k_{2,\theta} = f_{2,\theta}/f_y \text{ but } f_{2,\theta} \leq f_{u,\theta} \tag{8.2}$$

$k_{u,\theta}$ is the ultimate strength at temperature θ relative to the ultimate strength at 20°C, i.e.:

$$k_{u,\theta} = f_{u,\theta}/f_u \tag{8.3}$$

$k_{E,\theta}$ is the slope of linear elastic range at temperature θ relative to the slope at 20°C, i.e.:

$$k_{E,\theta} = E_\theta/E \tag{8.4}$$

$k_{\varepsilon u,\theta}$ is the strain at ultimate strength at temperature θ relative to the strain at ultimate strength at 20°C, i.e.:

$$k_{\varepsilon u,\theta} = \varepsilon_{u,\theta}/\varepsilon_u \tag{8.5}$$

where:

E is the modulus of elasticity at 20°C (= 200×10^3 N/mm^2)

f_y is the characteristic yield strength at 20°C, as defined in Section 2.3

f_u is the characteristic ultimate strength at 20°C, as defined in Section 2.3.

For material in the cold worked condition, or where an enhanced strength is being used arising from cold forming during the fabrication of the section, the following strength reduction factors may be used:

$k_{p0,2,\theta,CF} = k_{p0,2,\theta}$ $\quad 200 \leq \theta \leq 700\,°C$

$k_{p0,2,\theta,CF} = 0{,}8\,k_{p0,2,\theta}$ $\quad \theta \geq 800\,°C$

$k_{2,\theta,CF} = k_{2,\theta}$ $\quad 200 \leq \theta \leq 700\,°C$

$k_{2,\theta,CF} = 0{,}9\,k_{2,\theta}$ $\quad \theta \geq 800\,°C$

$k_{u,\theta,CF} = k_{u,\theta}$ $\quad$ for all temperatures

Where the subscript CF relates to material in the cold worked/cold formed condition.

Note that in the simple calculation methods for determining fire resistance given in Section 8.3, the following characteristic material strengths are used:

Columns	$f_{p0,2,\theta}$	(all cross-section Classes)
Restrained beams	$f_{2,\theta}$	(Class 1-3 cross-sections)
	$f_{p0,2,\theta}$	(Class 4 cross-sections)
Unrestrained beams	$f_{p0,2,\theta}$	(all cross-section Classes)
Tension members	$f_{2,\theta}$	(all cross-section Classes)

Table 8.1 Reduction factors for strength, stiffness and strain at elevated temperature

Temperature θ (°C)	Reduction Factor $k_{p0,2,\theta}$	Reduction Factor $k_{2,\theta}$	Reduction Factor $k_{u,\theta}$	Reduction Factor $k_{E,\theta}$	Reduction Factor $k_{\varepsilon u,\theta}$
Austenitic I 1.4301, 1.4307, 1.4318					
20	1,00	1,31	1,00	1,00	1,00
100	0,78	1,02	0,81	0,96	0,56
200	0,65	0,88	0,72	0,92	0,42
300	0,60	0,82	0,68	0,88	0,42
400	0,55	0,78	0,66	0,84	0,42
500	0,50	0,73	0,61	0,80	0,42
600	0,46	0,68	0,54	0,76	0,33
700	0,38	0,54	0,40	0,71	0,24
800	0,25	0,35	0,25	0,63	0,15
900	0,15	0,18	0,13	0,45	0,15
1000	0,07	0,08	0,08	0,20	0,20
1100	0,05	0,06	0,05	0,10	-
Austenitic II 1.4401, 1.4404, 1.4541					
20	1,00	1,19	1,00	1,00	1,00
100	0,86	1,13	0,87	0,96	0,56
200	0,72	0,98	0,80	0,92	0,42
300	0,67	0,92	0,78	0,88	0,42
400	0,62	0,85	0,77	0,84	0,42
500	0,60	0,82	0,74	0,80	0,42
600	0,56	0,75	0,67	0,76	0,33
700	0,50	0,68	0,51	0,71	0,24
800	0,41	0,50	0,34	0,63	0,15
900	0,22	0,26	0,19	0,45	0,15
1000	0,14	-	0,10	0,20	0,20
1100	0,07	-	0,07	0,10	-

Temperature θ (°C)	Reduction Factor $k_{p0,2,\theta}$	Reduction Factor $k_{2,\theta}$	Reduction Factor $k_{u,\theta}$	Reduction Factor $k_{E,\theta}$	Reduction Factor $k_{\varepsilon u,\theta}$
Austenitic III 1.4571					
20	1,00	1,31	1,00	1,00	1,00
100	0,89	1,16	0,88	0,96	0,56
200	0,82	1,07	0,81	0,92	0,42
300	0,77	1,01	0,79	0,88	0,42
400	0,72	0,95	0,79	0,84	0,42
500	0,69	0,91	0,77	0,80	0,42
600	0,65	0,85	0,71	0,76	0,33
700	0,59	0,76	0,57	0,71	0,24
800	0,51	0,63	0,38	0,63	0,15
900	0,29	0,38	0,23	0,45	0,15
1000	0,15	0,18	0,10	0,20	0,20
Duplex I 1.4362, 1.4062, 1.4482					
20	1,00	1,15	1,00	1,00	1,00
100	0,83	0,94	0,94	0,96	1,00
200	0,75	0,82	0,87	0,92	1,00
300	0,69	0,77	0,79	0,88	1,00
400	0,58	0,70	0,70	0,84	1,00
500	0,43	0,59	0,59	0,80	1,00
600	0,27	0,45	0,47	0,76	1,00
700	0,14	0,28	0,33	0,71	0,80
800	0,07	0,14	0,20	0,63	0,60
900	0,04	0,05	0,09	0,45	0,40
Duplex II 1.4462, 1.4162, 1.4662					
20	1,00	1,12	1,00	1,00	1,00
100	0,82	0,96	0,96	0,96	0,87
200	0,70	0,86	0,91	0,92	0,74
300	0,65	0,82	0,88	0,88	0,74
400	0,60	0,76	0,82	0,84	0,74
500	0,53	0,67	0,71	0,80	0,74
600	0,42	0,55	0,56	0,76	0,74
700	0,27	0,37	0,38	0,71	0,44
800	0,15	0,21	0,22	0,63	0,14
900	0,07	0,11	0,14	0,45	0,14
1000	0,01	0,03	0,06	0,20	0,14

Temperature θ (°C)	Reduction Factor $k_{p0,2,\theta}$	Reduction Factor $k_{2,\theta}$	Reduction Factor $k_{u,\theta}$	Reduction Factor $k_{E,\theta}$	Reduction Factor $k_{\varepsilon u,\theta}$
Ferritic I 1.4509, 1.4521, 1.4621					
20	1,00	1,12	1,00	1,00	1,00
100	0,88	1,01	0,93	0,98	1,00
200	0,83	0,99	0,91	0,95	1,00
300	0,78	0,92	0,88	0,92	1,00
400	0,73	0,90	0,82	0,86	0,75
500	0,66	0,86	0,78	0,81	0,75
600	0,53	0,71	0,64	0,75	0,75
700	0,39	0,48	0,41	0,54	0,75
800	0,10	0,13	0,11	0,33	0,75
900	0,04	0,04	0,03	0,21	0,75
1000	0,02	0,02	0,01	0,09	0,75
Ferritic II 1.4003, 1.4016					
20	1,00	1,19	1,00	1,00	1,00
100	0,93	1,12	0,93	0,98	1,00
200	0,91	1,09	0,89	0,95	1,00
300	0,89	1,04	0,87	0,92	1,00
400	0,87	1,08	0,84	0,86	0,75
500	0,75	1,01	0,82	0,81	0,75
600	0,43	0,48	0,33	0,75	0,75
700	0,16	0,18	0,13	0,54	0,75
800	0,10	0,12	0,09	0,33	0,75
900	0,06	0,09	0,07	0,21	0,75
1000	0,04	0,06	0,05	0,09	0,75

8.3 Determination of structural fire resistance

Fire resistance may be determined by one or more of the following approaches:

- simple calculation methods applied to individual members,
- advanced calculation methods,
- testing.

Simple calculation methods are based on conservative assumptions. Advanced calculation methods are design methods in which engineering principles are applied in a realistic manner to specific applications. Where no simple calculation method is given, it is necessary to use either a design method based on an advanced calculation model or a method based on test results.

EN 1993-1-2 assumes the simple calculation methods for carbon steel apply also to stainless steel. However, some of these rules have been shown to be very conservative for stainless steel and it is expected that the modified rules given in Section 8.3 will be included in the next revision of EN 1993-1-2, which can be summarised as:

1. Use of $f_{p0,2,\theta}$ (as opposed to $f_{2,\theta}$) for determining the:
   - buckling resistance of columns (all cross-section classes);
   - moment resistance of restrained Class 4 beams;
   - moment resistance of unrestrained beams (all cross-section Classes).
2. Use of a temperature dependent value for ε for cross-section classification.
3. Use of room temperature buckling curves for columns and unrestrained beams.

8.3.2 Cross section classification

In fire design, the method of classification of cross-sections described in Section 5 of this document should be adopted, using a temperature-dependent value for ε:

$$\varepsilon_\theta = \varepsilon \left[\frac{k_{E,\theta}}{k_{y,\theta}} \right]^{0,5} \tag{8.6}$$

Alternatively, the following conservative value for ε can be adopted, using design properties at 20 °C:

$$\varepsilon = 0,85 \left[\frac{235}{f_y} \frac{E}{210000} \right]^{0,5} \tag{8.7}$$

where:

$k_{y,\theta}$ is either $k_{p0,2,\theta}$ or $k_{2,\theta}$, depending on the mode of loading and section class (see Section 8.2).

8.3.3 Tension members

The design resistance $N_{fi,\theta,Rd}$ of a tension member at a uniform temperature θ should be determined from:

$$N_{fi,\theta,Rd} = k_{2,\theta} N_{Rd} [\gamma_{M0} / \gamma_{M,fi}] \tag{8.8}$$

where:

$k_{2,\theta}$ is the reduction factor for the strength at 2% total strain at temperature θ

N_{Rd} is the design resistance of the cross-section $N_{pl,Rd}$ for normal temperature design, according to Section 5.7.2.

γ_{M0} and $\gamma_{M,fi}$ are partial factors, see Table 4.1 and Section 8.1.

Where the temperature in the member is non-uniform, the design resistance is given by:

$$N_{fi,t,Rd} = \sum_{i=1}^{n} A_i \, k_{2,\theta i} \, f_y / \gamma_{M,fi} \tag{8.9}$$

where:

A_i is an elemental area of the cross-section

θ_i is the temperature in the elemental area A_i

$k_{2,\theta i}$ is the reduction factor for the strength at 2% total strain at temperature θ_i (see Section 8.2).

Alternatively, the design resistance $N_{fi,t,Rd}$ at time t of a tension member with a non-uniform temperature distribution may conservatively be taken as equal to the design resistance $N_{fi,\theta,Rd}$ of a tension member with a uniform temperature θ equal to the maximum temperature θ_{max} reached at time t.

8.3.4 Compression members

The design buckling resistance $N_{b,fi,t,Rd}$ at time t of a compression member with a uniform temperature θ is given by:

$$N_{b,fi,t,Rd} = \frac{\chi_{fi} A k_{p0,2,\theta} f_y}{\gamma_{M,fi}} \quad \text{for Class 1, 2 or 3 sections} \tag{8.10}$$

$$N_{b,fi,t,Rd} = \frac{\chi_{fi} A_{eff} k_{p0,2,\theta} f_y}{\gamma_{M,fi}} \quad \text{for Class 4 sections} \tag{8.11}$$

where:

$k_{p0,2,\theta}$ is the 0,2% proof strength reduction factor at temperature θ (see Section 8.2).

χ_{fi} is the reduction factor for flexural buckling in fire, given by:

$$\chi_{fi} = \frac{1}{\phi_\theta + \sqrt{\phi_\theta^2 - \bar{\lambda}_\theta^2}} \quad \text{but } \chi_{fi} \leq 1 \tag{8.12}$$

where:

$$\phi_\theta = 0{,}5[1 + \alpha(\bar{\lambda}_\theta - \bar{\lambda}_0) + \bar{\lambda}_\theta^2] \tag{8.13}$$

in which α and $\bar{\lambda}_0$ are the room temperature buckling coefficients given in Table 6.1 or Table 6.2.

The modified non-dimensional slenderness $\bar{\lambda}_\theta$ at temperature θ is given by:

$$\bar{\lambda}_\theta = \bar{\lambda}\left[\frac{k_{p0,2,\theta}}{k_{E,\theta}}\right]^{0,5} \quad \text{for all Classes of cross-section} \tag{8.14}$$

where:

$k_{E,\theta}$ is the reduction factor for the slope of the linear elastic range at temperature θ (see Section 8.2).

Where the temperature of the member is non-uniform, the compression resistance may conservatively be estimated by assuming a uniform temperature that is equal to the maximum temperature in the member.

The buckling length l_{fi} of a column for fire design should generally be determined as for normal temperature design. However, in a braced frame, the buckling length l_{fi} may be determined by considering the column as fixed in direction at continuous or semi-continuous connections to the column lengths in the fire compartments above and below. This assumption can only be made if the fire resistance of the building components that separate these fire compartments is not less than the fire resistance of the column.

In the case of a braced frame in which each storey comprises a separate fire compartment with sufficient fire resistance, the buckling length of a column in an intermediate storey is given by $l_{fi} = 0{,}5L$ and in the top storey the buckling length is given by $l_{fi} = 0{,}7L$, where L is the system length in the relevant storey, see Figure 8.1.

Figure 8.1 Buckling lengths l_{fi} of columns in braced frames

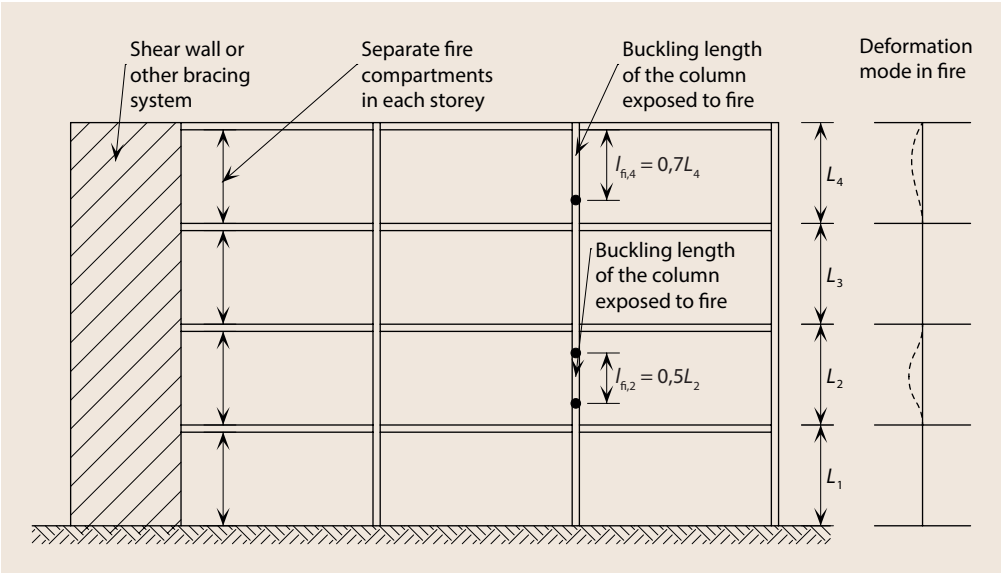

8.3.5 Laterally restrained beams

The design moment resistance $M_{fi,\theta,Rd}$ of a cross-section at a uniform temperature θ should be determined from:

$$M_{fi,\theta,Rd} = k_{2,\theta} M_{Rd} \left[\frac{\gamma_{M0}}{\gamma_{M,fi}} \right] \quad \text{for Class 1, 2 or 3 sections} \qquad (8.15)$$

$$M_{fi,\theta,Rd} = k_{p0,2,\theta} M_{Rd} \left[\frac{\gamma_{M0}}{\gamma_{M,fi}} \right] \quad \text{for Class 4 sections} \qquad (8.16)$$

where:

M_{Rd} is the design plastic moment resistance of the gross cross-section $M_{pl,Rd}$ (Class 1 or 2 cross-sections), the elastic moment resistance of the gross cross section $M_{el,Rd}$ (Class 3 cross-sections) or effective moment resistance of the effective cross section $M_{eff,Rd}$ (Class 4 cross-sections) for normal temperature design.

$k_{2,\theta}$ and $k_{p0,2,\theta}$ are as defined in Section 8.2.

Where it is necessary to allow for the effects of shear, the reduced moment resistance for normal temperature design according to Section 5.7.6 should be used.

The design moment resistance $M_{\mathrm{fi,t,Rd}}$ at time t of a cross-section in a member with a non-uniform temperature distribution, may conservatively be determined from:

$$M_{\mathrm{fi,t,Rd}} = \left[\frac{M_{\mathrm{fi,\theta,Rd}}}{\kappa_1 \kappa_2} \right] \tag{8.17}$$

where:

$M_{\mathrm{fi,\theta,Rd}}$ is the design moment resistance of the cross-section (or effective cross section for Class 4 cross-section) at a uniform temperature θ equal to the maximum temperature in the cross-section

κ_1 is an adaptation factor for non-uniform temperature across the cross-section, see Table 8.2

κ_2 is an adaptation factor for non-uniform temperature along the beam, see Table 8.2.

Table 8.2 Adaptation factors

Exposure condition	κ_1
For a beam exposed to fire on all four sides	1,0
For an unprotected beam exposed to fire on three sides, with a composite or concrete slab on its fourth side	0,70
For a protected beam exposed to fire on three sides, with a composite or concrete slab on its fourth side	0,85
	κ_2
At the supports of a statically indeterminate beam	0,85
In all other cases	1,0

The design shear resistance $V_{\mathrm{fi,t,Rd}}$ at time t of a cross-section with a non-uniform temperature distribution should be determined from:

$$V_{\mathrm{fi,t,Rd}} = k_{2,\theta_{\mathrm{web}}} V_{\mathrm{Rd}} \left[\frac{\gamma_{\mathrm{M0}}}{\gamma_{\mathrm{M,fi}}} \right] \quad \text{for Class 1, 2 or 3 sections} \tag{8.18}$$

$$V_{\mathrm{fi,t,Rd}} = k_{\mathrm{p0,2,\theta_{web}}} V_{\mathrm{Rd}} \left[\frac{\gamma_{\mathrm{M0}}}{\gamma_{\mathrm{M,fi}}} \right] \quad \text{for Class 4 sections} \tag{8.19}$$

where:

V_{Rd} is the shear resistance of the gross cross-section for normal temperature design, according to Section 5.7.5 (for temperatures above 400 °C, η should be taken as 1,0).

θ_{web} is the temperature in the web of the section.

8.3.6 Laterally unrestrained beams

The design buckling resistance moment $M_{\mathrm{b,fi,t,Rd}}$ at time t of a laterally unrestrained beam should be determined from:

$$M_{b,fi,t,Rd} = \frac{\chi_{LT,fi} W_{pl,y} k_{p0,2,\theta} f_y}{\gamma_{M,fi}}$$ for Class 1 and 2 sections (8.20)

$$M_{b,fi,t,Rd} = \frac{\chi_{LT,fi} W_{el,y} k_{p0,2,\theta} f_y}{\gamma_{M,fi}}$$ for Class 3 sections (8.21)

$$M_{b,fi,t,Rd} = \frac{\chi_{LT,fi} W_{eff,y} k_{p0,2,\theta} f_y}{\gamma_{M,fi}}$$ for Class 4 sections (8.22)

where:

$\chi_{LT,fi}$ is the reduction factor for lateral-torsional buckling in fire, given by:

$$\chi_{LT,fi} = \frac{1}{\phi_{LT,\theta} + \sqrt{\phi_{LT,\theta}^{\ 2} - \bar{\lambda}_{LT,\theta}^{\ 2}}}$$ but $\chi_{LT,fi} \leq 1$ (8.23)

$$\phi_{LT,\theta} = 0,5\left[1 + \alpha_{LT}\left(\bar{\lambda}_{LT,\theta} - 0,4\right) + \bar{\lambda}_{LT,\theta}^{\ 2}\right]$$ (8.24)

in which

α_{LT} is the room temperature imperfection factor given in Section 6.4.2.

$k_{p0,2,\theta}$ is the reduction factor defined in Section 8.2 at the maximum temperature θ reached anywhere in the section.

The non-dimensional slenderness $\bar{\lambda}_{LT,\theta}$ at temperature θ is given by:

$$\bar{\lambda}_{LT,\theta} = \bar{\lambda}_{LT}\left[\frac{k_{p0,2,\theta}}{k_{E,\theta}}\right]^{0,5}$$ for all Classes of cross-section (8.25)

where:

$k_{E,\theta}$ is the reduction factor defined in Section 8.2 at temperature θ.

8.3.7 Members subject to axial compression and bending

The combined effects of compressive loads and bending moments should be checked in accordance with the following expressions to prevent premature major and minor axis buckling and lateral torsional buckling:

a. For Class 1, 2 or 3 cross-sections

$$\frac{N_{fi,Ed}}{\chi_{min,fi} A k_{p0,2,\theta} \dfrac{f_y}{\gamma_{M,fi}}} + \frac{k_y M_{y,fi,Ed}}{M_{y,fi,\theta,Rd}} + \frac{k_z M_{z,fi,Ed}}{M_{z,fi,\theta,Rd}} \leq 1$$ (8.26)

$$\frac{N_{fi,Ed}}{\chi_{min1,fi} A k_{p0,2,\theta} \dfrac{f_y}{\gamma_{M,fi}}} + \frac{k_{LT} M_{y,fi,Ed}}{\chi_{LT,fi} M_{y,fi,\theta,Rd}} + \frac{k_z M_{z,fi,Ed}}{M_{z,fi,\theta,Rd}} \leq 1$$ (8.27)

where:

$N_{fi,Ed}$, $M_{y,fi,Ed}$ and $M_{z,fi,Ed}$ are the axial design load and bending moments for the fire situation

$M_{y,fi,\theta,Rd}$ and $M_{z,fi,\theta,Rd}$ are as defined in Section 8.3.5

$\chi_{min,fi}$ is the smallest reduction factor for flexural, torsional and torsional-flexural buckling at temperature θ, as defined in Section 8.3.4

$\chi_{min1,fi}$ is the smallest reduction factor for flexural buckling about the *z* axis, torsional and torsional-flexural buckling at temperature θ, as defined in Section 8.3.4

$\chi_{LT,fi}$ is the reduction factor for lateral torsional buckling at temperature θ, as defined in Section 8.3.6.

$$k_{LT} = 1 - \frac{\mu_{LT}\, N_{fi,Ed}}{\chi_{z,fi}\, A\, k_{p0,2,\theta}\, \dfrac{f_y}{\gamma_{M,fi}}} \leq 1 \tag{8.28}$$

$$\mu_{LT} = 0{,}15\bar{\lambda}_{z,\theta}\, \beta_{M,LT} - 0{,}15 \leq 0{,}9 \tag{8.29}$$

$$k_y = 1 - \frac{\mu_y\, N_{fi,Ed}}{\chi_{y,fi}\, A\, k_{p0,2,\theta}\, \dfrac{f_y}{\gamma_{M,fi}}} \leq 3 \tag{8.30}$$

$$\mu_y = \left(1{,}2\beta_{M,y} - 3\right)\bar{\lambda}_{y,\theta} + 0{,}44\beta_{M,y} - 0{,}29 \leq 0{,}8 \tag{8.31}$$

$$k_z = 1 - \frac{\mu_z\, N_{fi,Ed}}{\chi_{z,fi}\, A\, k_{p0,2,\theta}\, \dfrac{f_y}{\gamma_{M,fi}}} \leq 3 \tag{8.32}$$

$$\mu_z = \left(2\beta_{M,z} - 5\right)\bar{\lambda}_{z,\theta} + 0{,}44\beta_{M,z} - 0{,}29 \leq 0{,}8 \qquad \text{and } \bar{\lambda}_{z,\theta} \leq 1{,}1 \tag{8.33}$$

β_M is an equivalent uniform moment factor, given in Table 8.3.

b. For Class 4 cross-sections:

$$\frac{N_{fi,Ed}}{\chi_{min,fi}\, A_{eff} k_{p0,2,\theta}\, \dfrac{f_y}{\gamma_{M,fi}}} + \frac{k_y\, M_{y,fi,Ed} + N_{fi,Ed}\, e_y}{M_{y,fi,\theta,Rd}} + \frac{k_z\, M_{z,fi,Ed} + N_{fi,Ed}\, e_z}{M_{z,fi,\theta,Rd}} \leq 1 \tag{8.34}$$

$$\frac{N_{fi,Ed}}{\chi_{min1,fi}\, A_{eff}\, k_{p0,2,\theta}\, \dfrac{f_y}{\gamma_{M,fi}}} + \frac{k_{LT}\, M_{y,fi,Ed} + N_{fi,Ed}\, e_y}{\chi_{LT,fi}\, M_{y,fi,\theta,Rd}} + \frac{k_z M_{z,fi,Ed} + N_{fi,Ed}\, e_z}{M_{z,fi,\theta,Rd}} \leq 1 \tag{8.35}$$

where the terms are defined in (a) above except that in the calculation of k_y, k_z and k_{LT}, A should be replaced by A_{eff}.

Table 8.3
Equivalent uniform moment factors, β_M

Moment diagram	Equivalent uniform moment factor β_M
End moments	
	$\beta_{M,\psi} = 1{,}8 - 0{,}7\psi$
Moments due to in-plane lateral loads	
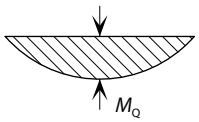	$\beta_{M,Q} = 1{,}3$
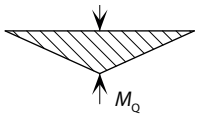	$\beta_{M,Q} = 1{,}4$
Moments due to in-plane lateral loads plus end moments	
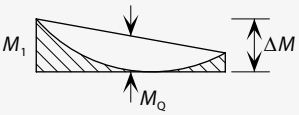	$\beta_M = \beta_{M,\psi} + \frac{M_Q}{\Delta M}\left(\beta_{M,Q} - \beta_{M,\psi}\right)$
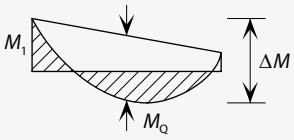	$M_Q = \lvert \max M \rvert$ due to lateral load only
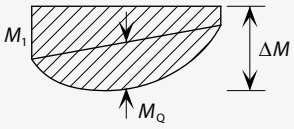	For moment diagram without change of sign: $\Delta M = \lvert \max M \rvert$
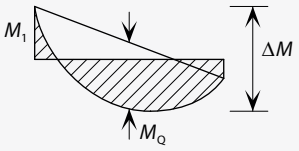	For moment diagram with change of sign: $\Delta M = \lvert \max M \rvert + \lvert \min M \rvert$

8.4 Thermal properties at elevated temperatures

8.4.1 Thermal elongation

The thermal elongation of austenitic stainless steel $\Delta l / l$ may be determined from the following:

$$\frac{\Delta l}{l} = \frac{\left(16 + 4{,}79 \times 10^{-3}\theta - 1{,}243 \times 10^{-6}\theta^2\right) \times \left(\theta - 20\right)}{10^6} \tag{8.36}$$

where:

l is the length at 20 °C

Δl is the temperature induced expansion

θ is the steel temperature (°C).

Table 8.4 gives values for the mean coefficient of thermal expansion for austenitic, duplex and ferritic stainless steels over different temperature ranges.

Table 8.4
Mean coefficient of thermal expansion

Steel temperature range (°C)	Mean coefficient of thermal expansion (10^{-6}/°C)		
	Austenitic	Duplex	Ferritic
20 - 100	16,7	13,2	10,3
20 - 200	17,2	13,9	10,7
20 - 300	17,7	14,3	11,1
20 - 400	18,1	14,7	11,5
20 - 500	18,4	15,1	11,8
20 - 600	18,8	15,4	12,0
20 - 700	19,1	15,9	12,4
20 - 800	19,4	16,3	12,9
20 - 900	19,4	16,7	13,4
20 - 1000	19,7	17,1	14,0
20 - 1100	20	17,5	-

8.4.2 Specific thermal capacity

The specific thermal capacity *c* may be determined from the following:

For austenitic and duplex stainless steels:

$$c = 450 + 0{,}28\times\theta - 2{,}91\times10^{-4}\,\theta^2 + 1{,}34\times10^{-7}\,\theta^3 \qquad \text{J/kg°C} \qquad (8.37)$$

For ferritic stainless steels:

$$c = 430 + 0{,}26\times\theta \qquad \text{J/kg°C} \qquad (8.38)$$

EN 1993-1-2 currently just gives Equation (8.37). It is expected that Equation (8.38) will be introduced into the next revision of EN 1993-1-2.

8.4.3 Thermal conductivity

The thermal conductivity λ may be determined from the following:

For austenitic and duplex stainless steels:

$$\lambda = 14{,}6 + 1{,}27\times10^{-2}\,\theta \qquad \text{W/m°C} \qquad (8.39)$$

For ferritic stainless steels:

$$\lambda = 20{,}4 + 2{,}28\times10^{-2}\,\theta - 1{,}54\times10^{-5}\,\theta^2 \qquad \text{W/m°C} \qquad (8.40)$$

EN 1993-1-2 currently just gives Equation (8.39). It is expected that Equation (8.40) will be introduced into the next revision of EN 1993-1-2.

8.4.4 Calculation of temperature rise in stainless steel

The method for calculating the temperature rise in carbon steel can also be applied to stainless steel.

The incremental rise in temperature of a uniformly heated bare stainless steel section in time interval Δt is given by:

$$\Delta\theta_t = \frac{A_m / V}{c\,\rho}\dot{h}_{net,d}\,\Delta t \qquad (8.41)$$

where:

c	is the specific thermal capacity of stainless steel, (J/kgK) (Section 8.4.2)
ρ	is the density of stainless steel (kg/m³), as given in Table 2.7 (usually considered as temperature independent)
A_m/V	is the section factor for unprotected steel members
A_m	is the surface area of the member per unit length
V	is the volume of the member per unit length
$\dot{h}_{net,d}$	is the design value of the net heat flux per unit area $= \dot{h}_{net,c} + \dot{h}_{net,r}$ (8.42)

in which:

$$\dot{h}_{net,c} = \alpha_c\left(\theta_g - \theta\right) \qquad (8.43)$$

$$\dot{h}_{net,r} = \phi\,\varepsilon_{res}\,5,67\times10^{-8}\left[\left(\theta_g + 273\right)^4 - \left(\theta + 273\right)^4\right] \qquad (8.44)$$

α_c	is the coefficient of heat transfer by convection (usually taken as 25 W/m²K)
θ_g	is the gas temperature of the environment of the member in fire exposure (°C), given by the nominal temperature-time curve
θ	is the temperature of the steel section which is assumed to be uniform at time t (°C)
ϕ	is the configuration factor
ε_{res}	is the resultant emissivity.

The parameter ε_{res} represents the radiation transmitted between the fire and the stainless steel surface and its magnitude depends on the degree of direct exposure of the element to the fire. Elements which are partially shielded from the radiant effects of the heat of the fire would have a lower value of ε_{res}. For stainless steel, EN 1993-1-2 gives a value of $\varepsilon_{res} = 0{,}4$.

The above equation for the incremental temperature rise may be used to determine steel temperatures by incremental integration, if the variation of the fire temperature with time is known. The nominal temperature-time curve for a cellulosic fire is given in EN 1991-1-2 as:

$$\theta_g = 20 + 345\,\log_{10}(8t + 1) \qquad (8.45)$$

where:

t	is the elapsed time (minutes)

8.5 Material modelling at elevated temperatures

The stress-strain curve at elevated temperatures may be calculated from the following expressions. Note that ANNEX C gives equivalent expressions for modelling the stress-strain curve at room temperature.

$$\varepsilon = \frac{\sigma}{E_\theta} + 0,002\left[\frac{\sigma}{f_{p0,2,\theta}}\right]^{n_\theta} \qquad \text{for } \sigma \le f_{p0,2,\theta} \tag{8.46}$$

The second stage of the stress-strain curve can either be expressed in terms of $f_{2,\theta}$ (Equation (8.47)) or $f_{u,\theta}$ (Equation (8.48)):

$$\varepsilon = \frac{\sigma - f_{p0,2,\theta}}{E_{p0,2,\theta}} + \left(0,02 - \varepsilon_{p0,2,\theta} - \frac{\left(f_{2,\theta} - f_{p0,2,\theta}\right)}{E_{p0,2,\theta}}\right) \times \left[\frac{\sigma - f_{p0,2,\theta}}{f_{2,\theta} - f_{p0,2,\theta}}\right]^{m_{\theta,2}} + \varepsilon_{p0,2,\theta} \qquad \text{for } f_{p0,2,\theta} < \sigma \le f_{u,\theta} \tag{8.47}$$

or

$$\varepsilon = \frac{\sigma - f_{p0,2,\theta}}{E_{p0,2,\theta}} + \varepsilon_{u,\theta}\left(\frac{\sigma - f_{p0,2,\theta}}{f_{u,\theta} - f_{p0,2,\theta}}\right)^{m_\theta} + \varepsilon_{p0,2,\theta} \qquad \text{for } f_{p0,2,\theta} < \sigma \le f_{u,\theta} \tag{8.48}$$

where

σ	is the engineering stress
ε	is the engineering strain
$f_{2,\theta}$	is the stress at 2% total strain at temperature θ
$\varepsilon_{p0,2,\theta}$	is the total strain corresponding to $f_{p0,2,\theta}$
$E_{p0,2,\theta}$	is the tangent modulus at $f_{p0,2,\theta}$
$\varepsilon_{u,\theta}$	is the strain at ultimate strength $f_{u,\theta}$ $(\varepsilon_{u,\theta} \le \varepsilon_u)$
$n_\theta, m_\theta, m_{\theta,2}$	are exponents which define the degree of material non-linearity at temperature θ.

$\varepsilon_{u,\theta}$ may be determined from the room temperature expression for ε_u given in ANNEX C, with elevated temperature values for strength.

Values for n_θ may be taken as the room temperature values for n. Values for m_θ and $m_{\theta,2}$ may be determined using the room temperature expression for m but with the elevated temperature values for $f_{p0,2,\theta}$ and $f_{u,\theta}$.

EN 1993-1-2 currently gives a different material model for stainless steel from that described above. However, it is expected that the model given by Equations (8.46), (8.47) and (8.48) will be introduced into the next revision of EN 1993-1-2 because, as a modified compound Ramberg-Osgood formulation, it is consistent with the widely adopted formulation for room temperature behaviour (ANNEX C). The new model is also more accurate and less complex, using parameters which have a clear physical significance.

FATIGUE

9.1 General

Consideration should be given to metal fatigue in structures or parts of structures subjected to significant levels of repeated stress. No fatigue assessment is normally required for building structures, except for members supporting lifting appliances, rolling loads or vibrating machinery, and for members subject to wind-induced oscillation.

In common with carbon steel structures, the combination of stress concentrations and defects at welded joints leads to these locations being almost invariably more prone to fatigue failure than other parts of the structure. Guidance on estimating the fatigue strength of carbon steel structures is applicable to austenitic and duplex stainless steels (see EN 1993-1-9).

Much can be done to reduce the susceptibility of a structure to fatigue by adopting good design practice. This involves judiciously selecting the overall structural configuration and carefully choosing constructional details that are fatigue resistant. The key to fatigue resistant design is a rational consideration of fatigue early in the design process. A fatigue assessment performed only after other design criteria have been satisfied may result in an inadequate or costly structure. It is also important to consider the needs of the fabricator and erector. It is therefore recommended that early consultations be held with them to point out areas of the structure which are most sensitive to fatigue cracking, to discuss special precautions and to become aware of fabrication and erection problems. In particular, the use of holes or lifting attachments to ease fabrication or erection should be considered during the fatigue evaluation.

It may be possible to eliminate potential fatigue problems by giving due regard to constructional details and avoiding:

- sharp changes in cross-section and stress concentrations in general,
- misalignments and eccentricities,
- small discontinuities such as scratches and grinding marks,
- unnecessary welding of secondary attachments, e.g. lifting lugs,
- partial penetration welds, fillet welds, intermittent welding, and backing strips,
- arc strikes.

Although weld improvement techniques such as weld profile control, weld toe grinding, and shot and hammer peening may improve the fatigue strength of a joint, there are insufficient data to quantify the possible benefits for stainless steel. It should also be noted that the techniques are all labour-intensive and require skill and experience of the operator to achieve maximum benefit. They should not, except in special cases, be seen as a design option.

TESTING

10.1 General

Testing of stainless steel materials and members may be required for a number of reasons:

- If advantage is to be taken of the strength enhancement of cold formed corners in members (see Section 2.2.1).
- If the geometry of a member is such that it lies outside applicable limits (such as those given in Section 5.2).
- If a number of structures or components are to be based on prototype testing.
- If confirmation of consistency of production is required.

The usual precautions and requirements for test procedures and results evaluation appertaining to carbon steel testing also apply to stainless steel testing. It is therefore generally recommended that such requirements are consulted, e.g. see Section 5.2 and Annex D of EN 1990 and Section 9 and Annex A of EN 1993-1-3. However, there are particular aspects of the behaviour of stainless steels which need to be given more thought in the design of the tests than perhaps would be the case for carbon steels. The following brief guidance is offered.

10.2 Stress-strain curve determination

When carrying out tensile tests on stainless test coupons, it is recommended that loading should be accomplished by pins passing through the ends of the coupon which are of sufficient area to sustain the shear. This is to ensure the coupon is axially loaded, thus enabling the actual shape of the stress-strain curve to be discerned without any spurious effect caused by premature yielding due to load eccentricity. Axiallity of loading may be confirmed by elastic tests with an extensometer placed at various orientations about the specimen. Because stainless steel exhibits a degree of anisotropy (different stress-strain characteristics parallel and transverse to the rolling directions), with higher strengths transverse to the rolling direction, it is recommended that due consideration is given to the orientation of the test specimens. Stainless steels have a strong strain rate dependency; for verification of tensile properties, the same strain rate as was used for establishing the mill certificate is recommended.

10.3 Tests on members

It is recommended that member tests should be full scale or as near to full scale as possible, depending on test facilities, and that the specimens should be manufactured by the same fabrication processes to be used in the final structure. If the components are welded, the prototype should be welded in the same way.

Due to anisotropy, it is recommended that the specimens are prepared from the plate or sheet in the same orientation (i.e. transverse or parallel to the rolling direction) as intended for the final structure. If the final orientation is unknown or cannot be guaranteed, it may be necessary to conduct tests for both orientations and take the less favourable set of results. For work hardened materials, both the tensile and compressive strength should be determined in the direction in question. Evaluation of the test results should be carried out with the relevant strength as reference.

Stainless steel displays higher ductility and greater strain hardening than carbon steel and therefore the test rig capabilities may need to be greater than those required for testing carbon steel members of equivalent material yield strength. This not only applies to rig loading capacity but also to the ability of the rig to allow greater deformation of the specimen.

It should be noted that at higher specimen loads, the effects of creep become more manifest and this may mean that strain or displacement readings do not stabilise within a reasonable time.

FABRICATION ASPECTS

11.1 Introduction

The purpose of this Section is to highlight relevant aspects of stainless steel fabrication for the design engineer, including recommendations for good practice. It also allows a preliminary assessment to be made of the suitability of a fabricator to perform the work.

Stainless steel is not a difficult material to work with. However, in some respects it is different from carbon steel and should be treated accordingly. Many fabrication and joining processes are similar to those used for carbon steel, but the different characteristics of stainless steel require special attention in a number of areas. It is important that effective communication is established between the designer and fabricator early in the project to ensure that appropriate fabrication practices can and will be adopted.

An overriding objective is to maintain the steel's corrosion resistance. It is essential that precautions are taken at all stages of storing, handling and forming to minimise influences that jeopardise the formation of the self-repairing passive layer. Special care must be taken to restore the full corrosion resistance of the welded zone. Although essential, the precautions are simple and, in general, are matters of good engineering practice.

It is important to preserve the good surface appearance of stainless steel throughout fabrication. Not only are surface blemishes unsightly, but they are usually unacceptable and prove time consuming and expensive to correct. Whereas surface blemishes will normally be hidden by paint in carbon steel structures, this will only rarely be the case for stainless steel structures.

The structural form may be dictated by the availability of materials. It should be recognised that the available range of hot rolled stainless steel sections is more limited than for carbon steel. This results in a greater use of cold formed and welded members than is normally encountered. Also, because of press brake length capabilities, only relatively short lengths can be formed, which leads to an increased use of splices. In detailing joints, consideration should be given to clearances for bolts near bend radii and to potential fit up problems arising from weld distortion.

11.2 EN 1090 *Execution of steel structures and aluminium structures*

Fabrication and erection of structural stainless steel should be carried out in accordance with EN 1090, which is a harmonised standard. Construction products

manufactured in accordance with EN 1090 must be CE marked if they are to be used in the European Economic Area. EN 1090 covers cold formed and hot finished austenitic, duplex and ferritic stainless steel products.

Part 1 of EN 1090 is *Requirements for Conformity Assessment of Structural Components*. This Part describes how manufacturers can demonstrate that the components they produce meet the declared performance characteristics (the structural characteristics which make them fit for their particular use and function).

Part 2 of EN 1090 is *Technical Requirements for Steel Structures.* This Part specifies the requirements for the execution of steel structures to ensure adequate levels of mechanical resistance and stability, serviceability and durability. It determines the performance characteristics for components that the manufacturer must achieve and declare through the requirements of Part 1. It covers technical requirements for a wide range of carbon steel and stainless steel structures, dealing with both hot rolled and cold formed product forms. It is applicable to structural components in buildings and other similar structures.

11.3 Execution class

An execution class must be specified in accordance with the (normative) Annex C of EN 1993-1-1. There are four execution classes which range from EXC4 (most onerous) to EXC1 (least onerous). The main reason for giving four execution classes is to provide a level of reliability against failure that is matched both to the consequences of failure for the structure, component or detail, and to the requirements of execution. Each class relates to a set of requirements for fabrication and in situ construction which are given in Annex A.3 of EN 1090-2. The execution class is used by steelwork contractors to put in place a set of manufacturing process controls that form part of a certified factory production control (FPC) system for CE marking fabricated steelwork. This has the effect of dividing the fabrication industry into companies with one of four sets of quality control processes. These limit the structures that each steelwork contractor is allowed to fabricate, e.g. a steelwork contractor with an EXC2 certified FPC system can only fabricate EXC1 and 2 structures. Clients, specifiers and main contractors can therefore use execution class to identify steelwork contractors with the correct level of quality and assurance controls. The execution class is also used by designers/specifiers to determine the right level of quality and assurance controls required during fabrication to meet their design assumptions.

The execution class is specified for the works as a whole, an individual component and a detail of a component. In some cases the execution class for the structure, the components and the details will be the same while in other cases the execution class for the components and the details may be different from that for the whole structure.

The factors governing the selection of the execution class are:

- the required reliability (based on either the required consequence class or the reliability class or both, as defined in EN 1990),

- the type of structure, component or detail,
- the type of loading for which the structure, component or detail is designed (static, quasi-static, fatigue or seismic).

Whilst each building needs to be considered on its own merits, execution class 2 (EXC2) will be appropriate for the majority of buildings constructed in non-seismic zones. EXC4 should be applied to structures with extreme consequences of a structural failure. The National Annex to EN 1993-1-1 gives guidance on the selection of execution class.

Over-specification of the execution class should be avoided wherever possible, to prevent unnecessary costs being introduced. For example, EXC2 may be the execution class derived for a project but full traceability (an EXC3 requirement) may be required instead of the partial (or batch) traceability requirement of EXC2. In such a case, rather than specifying EXC3 on the basis of achieving this single Clause requirement, it is suggested that EXC2 should still be specified but with the higher level of traceability added to the specification.

11.4 Storage and handling

Generally, compared to carbon steel, greater care is required in storing and handling stainless steel to avoid damaging the surface finish (especially for bright annealed or polished finishes). It is also necessary to avoid contamination by carbon steel and iron leading to increased potential for surface corrosion. Storage and handling procedures should be agreed between the relevant parties to the contract in advance of any fabrication and in sufficient detail to accommodate any special requirements. The procedures should cover, for instance, the following items:

- the steel should be inspected immediately after delivery for any surface damage,
- the steel may have a protective plastic or other coating. This should be left on as long as possible, removing it just before final fabrication. The protective covering should be specified in the procurement document if it is required (e.g. for bright annealed finishes),
- if a plastic strippable adhesive backed film is used instead of loosely wrapped plastic sheeting, it must be UV rated to prevent premature deterioration and residual adhesive surface contamination. Furthermore, the film life must be monitored so that it is removed within the manufacturer's suggested service life which is generally up to 6 months,
- storage in salt-laden humid atmospheres should be avoided. If this is unavoidable, packaging should prevent salt intrusion. Strippable films should never be left in place if surface salt exposure is expected because they are permeable to both salt and moisture and create the ideal conditions for crevice corrosion,
- storage racks should not have carbon steel rubbing surfaces and should, therefore, be protected by wooden, rubber or plastic battens or sheaths. Sheets and plates should preferably be stacked vertically; horizontally stacked sheets may get walked on with a risk of iron contamination and surface damage,

- carbon steel lifting tackle, e.g. chains, hooks, and cleats should be avoided. Again, the use of isolating materials, or the use of suction cups, will prevent iron pick-up. The forks of fork lift trucks should also be protected,
- contact with chemicals including acids, alkaline products, oils and greases (which may stain some finishes) should be avoided,
- ideally, segregated fabrication areas for carbon steel and stainless steel should be used. Only tools dedicated to stainless steel should be employed (this particularly applies to grinding wheels and wire brushes). Note that wire brushes and wire wool should be of stainless steel and generally in a grade that is equivalent in terms of corrosion resistance (e.g. do not use ferritic or lower alloyed austenitic stainless steel brushes on a more corrosion resistant stainless steel,
- as a precaution during fabrication and erection, it is advisable to ensure that any sharp burrs formed during shearing operations are removed,
- consideration should be given to any requirements needed in protecting the finished fabrication during transportation.

Guidance on the removal of contamination is given in ASTM A380.

11.5 Shaping operations

Austenitic stainless steels work harden significantly during cold working. This can be both a useful property, enabling extensive forming during stretch forming without risk of premature fracture, and a disadvantage, especially during machining when special attention to cutting feeds and speeds is required. The rate of work hardening differs with different grades, for example grade 1.4318 work hardens at a greater rate than other grades used in construction applications. It is easier to roll form and achieve flatness with ferritic stainless steels than austenitic stainless steels.

11.5.1 Cutting

Stainless steel is a relatively expensive material compared to some other metals and care is needed in marking out plates and sheets to avoid wastage in cutting. Note that more wastage may result if the material has a polishing grain (or a unidirectional pattern) which has to be maintained in the fabrication. Some marking pens/crayons will prove difficult to remove, or cause staining, if used directly on the surface (rather than on any protective film). All markers should be checked before use, as well as any solvents used to remove marks.

Stainless steel may be cut using usual methods, e.g. shearing and sawing, but power requirements will be greater than those for similar thicknesses of carbon steel, due to work hardening. If possible, cutting (and machining in general) should be carried out when the metal is in the annealed (softened) state, to limit work hardening and tool wear.

Plasma arc techniques are particularly useful for cutting thick plates and profiles up to 125 mm thick and where the cut edges are to be machined, e.g. for weld preparation.

Water jet cutting is appropriate for cutting material up to 200 mm thick, without heating, distorting or changing the properties of the stainless steel. Laser cutting is suitable for stainless steel, particularly when tighter tolerances are required or when cutting non-linear shapes or patterns: good quality cut edges can be produced with little risk of distortion to the steel. For cutting straight lines, guillotine shearing is widely used. By using open ended guillotines, a continuous cut greater in length than the shear blades can be achieved, although at the risk of introducing small steps in the cut edge. Oxyacetylene cutting is not satisfactory for cutting stainless steel, unless a powder fluxing technique is used.

11.5.2 Cold forming

Stainless steel is readily shaped by commonly used cold forming techniques such as bending, spinning, pressing and deep drawing. For structural applications press brake bending is the most relevant technique though, for high volume thin gauge products, roll forming may be more economic.

Again, the power requirement for bending stainless steel will be higher than for bending carbon steel due to work hardening (by about 50% in the case of the austenitic stainless steels or more in the case of duplex grades). Also, stainless steel has to be overbent to a slightly higher degree than carbon steel to counteract the effects of springback. Ferritic stainless steels do not undergo significant work hardening when cold formed. For complex cross-sections, it is prudent to involve the fabricator as early as possible in the design.

Stainless steel's high ductility allows small radii to be formed, perhaps as low as half the thickness in annealed materials. However, it is generally recommended to adopt the following internal radii as minima:

t	for austenitic grades
$2t$	for duplex grades
$2t$	for ferritic grades

where t is the thickness of the material.

As with carbon steel, cold forming may lead to a reduction in the toughness of stainless steel. If toughness is a critical requirement, the designer should consider the consequences of the cold forming process on the toughness of the material, for example by carrying out tests on a sample sheet. The reduction in toughness of austenitic grades due to cold forming will not be significant.

When bending circular tubes, the following conditions should usually be met:

- the outer tube diameter to wall thickness ratio d/t should not exceed 15 (to avoid costly tooling),
- the bend radius (at the centreline of the tube) should not be less than $1{,}5d$ or $d + 100$ mm, whichever is larger,
- any welding bead should be positioned close to the neutral axis to reduce the bending stresses at the weld.

Advice should be sought from a specialist bending contractor regarding whether a higher d/t ratio or lesser bend radius could be specified. Alternatively, appropriate pre-production tests should be carried out to ensure that bending does not cause mechanical damage and the dimensional tolerances are acceptable. For tubes of $d < 100$ mm, a less restrictive condition of the bend radius may be applicable, e.g. the radius should not be less than $2{,}5d$. Note that the implications of curvature on the buckling resistance may need to be considered by the designer.

11.5.3 Holes

Holes may be drilled, punched or laser cut. In drilling, positive cutting must be maintained to avoid work hardening and this requires sharp bits with correct angles of rake and correct cutting speeds. The use of a round tipped centre punch is not recommended as this work hardens the surface. A centre drill should be used; if a centre punch has to be used, it should be of the triangular pointed type. Punched holes can be made in austenitic stainless steel up to about 20 mm in thickness. The higher strength of duplex grades leads to a smaller limiting thickness. The minimum diameter of hole that can be punched out is 2 mm greater than the sheet thickness.

11.6 Welding

11.6.1 Introduction

The relevant standard for welding stainless steels is EN 1011-3 *Welding. Recommendations for welding of metallic materials. Arc welding of stainless steels*. The section below is a brief introduction to welding of stainless steels.

Austenitic stainless steels are generally readily welded using common processes, provided that suitable weld consumables are used. Duplex stainless steels require more control of the minimum and maximum heat input during welding and may require post-weld heat treatment or special welding consumables.

General cleanliness and the absence of contamination are important for attaining good weld quality. Oils or other hydrocarbons, dirt and other debris, strippable plastic film, and wax crayon marks should be removed to avoid their decomposition and the risk of carbon pick up and weld surface contamination. The weld should be free from zinc, including that arising from galvanised products, and from copper and its alloys. (Care needs to be taken when copper backing bars are used; a groove should be provided in the bar immediately adjacent to the fusion area.)

It is more important in stainless steel than carbon steel to reduce sites at which crevice corrosion (see Section 3.2.2) may initiate. Welding deficiencies such as undercut, lack of penetration, weld spatter, slag and stray arc strikes are all potential sites and should thus be minimised. Stray arc strikes or arcing at loose earth connections also damage the passive layer, and possibly give rise to crevice corrosion, thereby ruining the appearance of a fabrication.

Where the weld appearance is important, the engineer should specify the as welded profile and surface condition required. This may influence the welding process selected or the post-weld treatment. Consideration should also be given to the location of the weld; is it possible to apply the appropriate post-weld treatment?

The engineer should be aware that welding distortion is generally greater in stainless steel than in carbon steel (see Section 11.6.4). Heat input and interpass temperatures need to be controlled to minimise distortion and to avoid potential metallurgical problems (see Section 11.6.5).

Welding should be carried out with qualified procedures using a welding procedure specification (WPS) in accordance with the relevant part of EN ISO 15609, EN ISO 14555 or EN ISO 15620. Welders should be qualified in accordance with EN ISO 9606-1 and welding operators in accordance with EN ISO 14732. EN 1090-2 specifies the level of technical knowledge required for welding co-ordination personnel, which depends on the execution class, group of stainless steel and thickness of material being welded.

Welding procedures contain the following elements:

- verification of the welding method by detailing the derivation and testing requirements of weld procedures,
- the qualifications of welders,
- the control of welding operations during preparation, actual welding and post-weld treatment,
- the level of inspection and non destructive testing techniques to be applied,
- the acceptance criteria for the permitted level of weld defects.

Lock welding of the nut to the bolt should never be allowed, as the materials are formulated for strength and not for fusion welding. Upsetting the bolt threads (i.e. making them thicker at the ends) may be an acceptable alternative in a situation where the nuts are to be locked in place.

11.6.2 Processes

As mentioned above, the common fusion methods of welding can be used on stainless steel. Table 11.1 shows the suitability of various processes for thickness ranges, etc.

Table 11.1 Welding processes and their suitability

Weld process (EN ISO 4063)	Suitable product forms	Types of welded joint	Material thickness range	Weld positions	Suitable shop/site conditions
111 Metal arc welding with covered electrode (Manual metal arc, MMAW)	All but not sheet	All	3 mm[1] or greater	All	All
121/122 Submerged arc welding (SAW)	All but not sheet	All	6 mm[1] or greater	Flat	All
131 Metal arc inert gas (MIG)	All	All	2 mm[1] or greater	All	All[2]
136 Flux cored arc welding (FCAW)	All	All	2 mm[1] or greater	All	All
141 Tungsten inert gas (TIG)	All	All	Up to approx. 10 mm	All	All[2]
2 Resistance welding	Sheet only	All	Up to approx. 3 mm	All	All
521/522 Laser beam welding (LBW)	All	All	Depending on the section, up to 25 mm may be possible	All	Shop only

Notes:
[1] Depends upon type of weld joint used.
[2] More sensitive to weather than other processes and better environmental protection is required.

Preheating of austenitic and duplex stainless steels is not normally performed, except to evaporate any condensation (water) on the surface.

Ferritic grades are susceptible to grain growth at temperatures above 950 °C, resulting in decreased toughness. To counter this, welding heat input should be kept low by keeping the weld pool small and using faster travel speeds. With good heat input control, tough welds are achievable in light gauges, up to 2-3 mm, where toughness is better anyway due to the lack of thickness restraint.

11.6.3 Consumables

Widely available consumables have been formulated to give weld deposits of equivalent strength and corrosion resistance to the parent metal and to minimise the risk of solidification cracking. For specialist applications, such as unusually aggressive environments or where non-magnetic properties are required, the advice of steel producers and manufacturers of consumables should be sought. All consumables should conform to the requirements specified in EN 1090-2. It is important that consumables are kept free from contaminants and stored according to the manufacturer's instructions. Any process that uses a flux (e.g. MMAW, FCAW, SAW) is susceptible to moisture pick-up from humid air, which can lead to porosity in the weld. Some processes such as TIG or laser welding may not use filler metals.

The use of austenitic filler metals to weld ferritic stainless steels produces welds with superior toughness compared with ferritic fillers. Welding ferritic grades without using a filler material is possible, although this may result in lower corrosion resistance, ductility and toughness and hence should only be used with care.

11.6.4 Welding distortion

In common with other metals, stainless steel suffers from distortion due to welding. The types of distortion (angular, bowing, shrinkage etc.) are similar in nature to those found in carbon steel structures. However, the distortion of stainless steel, particularly of austenitic grades, is greater than that of carbon steel because of higher thermal elongation and lower thermal conductivity (which lead to steeper temperature gradients), see Section 2.4. Ferritic stainless steels demonstrate less distortion when heated compared to the austenitic grades. The weld distortion of duplex stainless steels falls in-between the austenitic and ferritic grades.

Welding distortion can only be controlled, not eliminated. The following actions may be taken:

Designer actions

- remove the necessity to weld, for example by specifying, if available, hot rolled sections, hollow sections or laser fused sections (laser fusing results in less distortion),
- reduce the extent of welding,
- reduce the cross-section of welds. For instance in thick sections, specify double V, U or double U preparations in preference to single V,
- use symmetrical joints,
- design to accommodate wider dimensional tolerances.

Fabricator actions

- use efficient clamping jigs. If possible the jig should incorporate copper or aluminium bars to help conduct heat away from the weld area,
- when efficient jigging is not possible, use closely spaced tack welds laid in a balanced sequence,
- ensure that good fit up and alignment is obtained prior to welding,
- use the lowest heat input commensurate with the selected weld process, material and thickness,
- use balanced welding and appropriate sequences (e.g. backstepping and block sequences).

11.6.5 Metallurgical considerations

It is not possible to cover here the metallurgy of stainless steels except for some of the more significant factors.

Formation of precipitates in the austenitic grades

In the austenitic steels, the heat affected zone is relatively tolerant to grain growth and to the precipitation of brittle and intermetallic phases. Welding procedures are usually designed to control the time spent in the critical temperature range for carbide precipitation effects (450 - 900 °C). Excessive weld repair naturally increases the time spent and is thus usually restricted to three major repairs.

The formation of chromium carbide precipitates, and the ensuing loss of corrosion resistance, is discussed in Section 3.2.6 *Intergranular corrosion* where it is noted that this is not normally a problem with the low carbon grades of austenitic stainless steel (i.e. 1.4307 and 1.4404). However, weld decay effects may be manifested in welded construction of grades which do not have low carbon.

Solidification cracking in the austenitic grades

Solidification cracking of welds is avoided when the weld structure contains approximately 5% ferrite or higher. Steelmakers balance the composition and heat treatment of the common grades of austenitic steel to ensure that they contain little or no ferrite when delivered but will form sufficient ferrite in an autogenous weld (i.e. a weld with no filler added). Even so, to reduce any likelihood of cracking, it is prudent to minimise heat inputs, interpass temperatures and restraint when making autogenous welds. In thicker materials filler metal is added and the use of good quality consumables will again ensure the appropriate amount of ferrite is formed. It is not normally necessary to measure the precise amount of ferrite formed; appropriate weld procedures and consumables will ensure that solidification cracking will not occur.

Embrittlement of duplex grades

Duplex steels are sensitive to 475 °C and σ-phase embrittlement. 475 °C embrittlement occurs when the steel is held within or cooled slowly through the approximate temperature range 550 °C to 400 °C and this produces an increase in tensile strength and hardness with a decrease in tensile ductility and impact strength. σ-phase embrittlement might occur after a long exposure at a temperature in the range 565 °C to 900 °C but can occur in as short as half an hour under certain conditions (depending on the composition and the thermo-mechanical state of the steel). The effects of σ-phase embrittlement are greatest at room temperature or lower. σ-phase embrittlement has an adverse effect on corrosion resistance.

Both 475 °C and σ-phase embrittlement can be adequately controlled by adopting correct welding procedures; a maximum interpass temperature of 200 °C is often suggested. Particular care must be exercised when welding heavy sections.

To avoid embrittlement, long term exposure to temperatures above 300 °C should be avoided.

11.6.6 Post-weld treatment

Post-weld heat treatment of stainless steel welds is rarely done outside a producing mill environment. In certain circumstances, a stress relief heat treatment may be required. However, any heat treatment may involve risk and specialist advice should be sought.

Post-weld finishing is generally necessary, as discussed in the following paragraphs, especially if arc welding processes are involved. It is important to define the required post-weld treatment for avoiding cost overruns and possible poor service performance. Finishing techniques common to all fabrications are covered in Section 11.8.

The processes usually employed for weld dressing are wire brushing and grinding. The amount of dressing should be minimised by the fabricator. Light grinding with a fine wheel is best; too much pressure during grinding can lead to heating which can reduce corrosion resistance. Wire brushes should be made of compatible stainless steel (see Section 11.4). Intense brushing of welds may lead to incrustation of surface contaminants, which may cause corrosion.

It is good practice to remove all traces of heat tint. However, yellow heat tint may prove satisfactory when the stainless steel offers a good margin of resistance for the particular environment. Where this is not so, or where the tint is not acceptable on aesthetic grounds, it may be removed by pickling or glass bead blasting. Pickling may be carried out by immersion in a bath (see Section 11.8) or by using pastes in accordance with the manufacturer's instructions.

Peening the surface of a weld is a beneficial post-weld treatment. It introduces compressive stresses into the surface which improves fatigue and stress corrosion cracking resistance and aesthetic appearances. However, peening cannot be used to justify a change in fatigue assessment.

The action of removing metal during substantial machining will give rise to stress relieving and hence distortion of the as-welded product. In those cases where the distortion is such that dimensional tolerances cannot be achieved, a thermal stress treatment may be required.

11.6.7 Inspection of welds

Table 11.2 compares the inspection methods commonly used on stainless steel welds with those on carbon steel welds.

The methods are used as necessary depending on the degree of structural and corrosion integrity required for the environment under consideration. However, visual inspection should be carried out during all stages of welding as it can prevent many problems becoming troublesome as fabrication continues. Surface examination of stainless steel is more important than that of carbon steel, since stainless steel is primarily used to combat corrosion and even a small surface flaw can render the material liable to corrosion attack.

Table 11.2 Inspection methods for welds

NDT type	Austenitic stainless steel	Duplex stainless steel	Ferritic stainless steel	Carbon steel
Surface	Visual Dye Penetrant	Visual Dye Penetrant Magnetic Particle	Visual Dye Penetrant Magnetic Particle	Visual Dye Penetrant Magnetic Particle
Volumetric	Radiographic (X-ray, Gamma)	Radiographic (X-ray, Gamma)	Radiographic (X-ray, Gamma)	Radiographic (X-ray, Gamma) Ultrasonic

Magnetic particle inspection is not an option for the austenitic steels since these are non-magnetic. Ultrasonic methods are of limited use on welds because of difficulties in interpretation; however, they can be used on parent material. Gamma radiography is not suitable for detecting cracking or lack of fusion in stainless steel materials less than 10 mm thick.

11.7 Galling and seizure

If surfaces are under load and in relative motion, fastener thread galling or cold welding can occur due to local adhesion and rupture of the surfaces with stainless steel, aluminium, titanium and other alloys which self-generate a protective oxide surface film for corrosion protection. In some cases weld bonding and seizure may result. In applications where disassembly will not occur and any loosening of fasteners is structurally undesirable, it may be an advantage.

In applications where easy fastener removal for repairs is important, galling should be avoided. Several precautions can be taken to avoid this problem with stainless steel:

- slow down the installation RPM speed,
- make sure the threads are as smooth as possible,
- lubricate the internal or external threads with products containing molybdenum disulphide, mica, graphite or talc, or a suitable proprietary pressure wax (but care should be taken to evaluate the suitability of a commercial anti-galling dressing for the application in question),
- use dissimilar standard grades of stainless steel (grades which differ in composition, work hardening rate and hardness). For example use grade A2-C2, A4-C4 or A2-A4 bolt-nut combinations from EN ISO 3506,
- in severe cases, use a proprietary high work-hardening stainless steel alloy for one or both of the mating surfaces (e.g. S21800, also known as Nitronic 60) or apply a hard surface coating.

It is recommended that bolting material should be in the cold worked condition, property class 70 minimum (see Table 2.6). Bolting materials should not be used in the softened condition because of the propensity for galling. Using rolled as opposed to machined threads and avoiding the use of fine threads and tight fitting thread forms reduces the likelihood of galling.

11.8 Finishing

The surface finish of stainless steel is an important design criterion and should be clearly specified according to architectural or functional requirements. The finer the finish, the greater the cost. This is where precautions taken earlier in handling and welding will pay off. Initial planning is important in reducing costs. For instance, if a tube to tube weld in a handrail or balustrade is hidden inside an upright, there will be a reduced finishing cost and a significant improvement in the final appearance of the

handrail. When polishing, grinding, or finishes other than mill or abrasive blasting are specified, it is generally most cost effective for polishing houses to apply those finishes prior to fabrication. For example, hot-formed angles and channels, tube, pipe, and plate can be polished before they are welded or otherwise connected to other components.

The surface of the steel should be restored to its corrosion resisting condition by removing all scale and contamination. Pickling in an acid bath will loosen any scale, enabling it to be brushed off with a bristle brush, but it may change the appearance of the finish to a more matt or dull finish. Pickling will also dissolve any embedded iron or carbon steel particles, which, if not removed, can show up as rust spots on the stainless steel surface.

Abrasive treatments, such as grinding, polishing and buffing, produce unidirectional finishes and thus the blending of welds may not be easy on plates/sheets with normal rolled surfaces. A degree of experimentation may be required to determine detailed procedures to obtain a suitable finish. Laser welding is generally preferable for welded aesthetic structural components because the joint is less visible.

Electropolishing produces a bright shiny surface similar to a highly buffed surface finish. It removes a thin surface layer along with any light surface oxides. Heavy oxides must be removed by pickling or grinding to ensure a uniform appearance after electropolishing. When component size permits, the electropolishing is carried out by immersion in a tank containing an electrolyte and electrical connections. Handheld units can be used to selectively remove heat tint from the weld zone or polish selective areas. There are other finishing processes (electroplating, tumbling, etching, colouring, and surface blackening) but these would only rarely be used for structural stainless steel and so are not described here.

It is worth noting again that the surface should be free of contaminants in the assembled structure. Particular consideration should be given to the possibility of contamination arising from work on adjacent carbon steelwork, especially from grinding dust or sparks from abrasive cutting. Either the stainless steel should be protected by removable plastic film, or final cleaning after completion of the structure should be specified in the contract documents.

ANNEX A - CORRELATION BETWEEN STAINLESS STEEL DESIGNATIONS

Table A.1 gives the correlations between EN 10088 and US designations.

Table A.1 Stainless steel designations - correlation between European and US standards

Steel grade to EN 10088		US	
No.	**Name**	**ASTM Type**	**UNS**
Austenitic			
1.4301	X5CrNi18-10	304	S30400
1.4306	X2CrNi19-11	304L	S30403
1.4307	X2CrNi18-9	304L	S30403
1.4311	X2CrNin18-10	304LN	S30453
1.4318	X2CrNiN18-7	301LN	S30153
1.4401	X5CrNi Mo17-12-2	316	S31600
1.4404	X2CrNiMo17-12-2	316L	S31603
1.4406	X2CrNiMoN17-11-2	316LN	S31653
1.4429	X2CrNiMoN17-13-3	316LN	S31653
1.4432	X2CrNiMo17-12-3	316L	S31603
1.4435	X2CrNiMo18-14-3	316L	-
1.4439	X2CrNiMoN17-13-5	317LMN	S31726
1.4529	X1NiCrMoCuN25-20-7	-	N08926
1.4539	X1NiCrMoCu25-20-5	904 L	N08904
1.4541	X6CrNiTi18-10	321	S32100
1.4547	X1CrNiMoCuN20-18-7	-	S31254
1.4565	X2CrNiMnMoN25-18-6-5	-	S34565
1.4567 *	X3CrNiCu18–9-4		S30430
1.4571	X6CrNiMoTi17-12-2	316Ti	S31635
1.4578 *	X3CrNiCuMo17–11–3-2	-	-
Duplex			
1.4062 *	X2CrNiN22-2--		S32202
1.4162	X2CrMnNiN21-5-1		S32101
1.4362	X2CrNiN23-4	2304#	S32304
1.4410	X2CrNiMoN25-7-4	2507#	S32750
1.4462	X2CrNiMoN22-5-3	2205#	S32205
1.4482 *	X2CrMnNiMoN21–5-3		-
1.4501 *	X2CrNiMoCuWN25–7-4		S32760
1.4507 *	X2CrNiMoCuWN25–7-4		S32520
1.4662 *	X2CrNiMnMoCuN24–4-3–2		S82441

Table A.1 (Continued)

Steel grade to EN 10088		US	
No.	**Name**	**ASTM Type**	**UNS**
Ferritic			
1.4003	X2CrNi12	-	S41003
1.4016	X6Cr17	430	S43000
1.4509	X2CrTiNb18	441+	S43940
1.4512	X2CrTi12	409	S40900
1.4521	X2CrMoTi18-2	444	S44400
1.4621 *	X2CrNbCu21	-	S44500

All the above steels are in EN 10088-4/5 except for those marked with *, which are currently only in EN 10088-2/3.
Commonly used trade names.
+ 441 is a common trade name for this grade but not an ASTM type.

ANNEX B - STRENGTH ENHANCEMENT OF COLD FORMED SECTIONS

The following formulae may generally be applied to all types of cold formed sections.

Work hardening (or cold working) arising during the fabrication of cold formed structural sections may be utilised in cross section and member design by replacing f_y with the average enhanced yield strength f_{ya}. For column buckling, f_{ya} should be used in conjunction with the buckling curves given in Table 6.1. The method in this annex supersedes and extends the provisions given in the UK National Annex to EN 1993-1-4. It is based on a wider pool of underpinning test data and covers a broader range of cross-sections.

The additional benefit of strength enhancement due to work hardening in service may also be taken into account in design using the Continuous Strength Method, as described in Annex D.

a. For stainless steel sections formed by press braking, an enhanced average yield strength f_{ya} may be adopted to account for cold working in sections with 90° corners:

$$f_{ya} = \frac{f_{yc}\, A_{c,pb} + f_y \left(A - A_{c,pb} \right)}{A} \tag{B.1}$$

b. For stainless steel cold rolled box sections (RHS), an enhanced average yield strength f_{ya} may be adopted to account for cold working in the section flat faces and an extended corner region:

$$f_{ya} = \frac{f_{yc}\, A_{c,rolled} + f_{yf} \left(A - A_{c,rolled} \right)}{A} \tag{B.2}$$

c. For stainless steel cold rolled circular hollow sections (CHS), an enhanced average yield strength f_{ya} may be adopted to account for cold working during section forming:

$$f_{ya} = f_{yCHS} \tag{B.3}$$

Where:

f_y	is the yield strength of the basic material (i.e. the flat sheet or coil material out of which sections are made by cold forming, given in Table 2.2).
f_{yc}	is the predicted enhanced yield strength of the corner region
f_{yf}	is the predicted enhanced yield strength of the section flat face
f_{yCHS}	is the predicted enhanced yield strength of a circular hollow section
A	is the gross cross-sectional area of the section.

$A_{c,pb}$ is the total corner cross-sectional area for press braked sections

$A_{c,rolled}$ is the total corner cross-sectional area for cold rolled box sections and includes a region of length $2t$, which extends around the perimeter of the cross-section, both sides of each corner.

i. Determination of f_{yc}, f_{yf} and f_{yCHS}

$$f_{yc} = 0{,}85K\,(\varepsilon_c + \varepsilon_{p0,2})^{n_p} \quad \text{and} \quad f_y \le f_{yc} \le f_u \tag{B.4}$$

$$f_{yf} = 0{,}85K\,(\varepsilon_f + \varepsilon_{p0,2})^{n_p} \quad \text{and} \quad f_y \le f_{yf} \le f_u \tag{B.5}$$

$$f_{yCHS} = 0{,}85K\,(\varepsilon_{CHS} + \varepsilon_{p0,2})^{n_p} \quad \text{and} \quad f_y \le f_{yCHS} \le f_u \tag{B.6}$$

where:

ε_c is the strain induced in the corner region during section forming

ε_f is the strain induced in the flat faces of box sections during section forming

ε_{CHS} is the strain induced in a CHS during section forming.

which are given by:

$$\varepsilon_c = \frac{t}{2(2r_i + t)} \tag{B.7}$$

$$\varepsilon_f = \left[\frac{t}{900}\right] + \left[\frac{\pi t}{2(b + h - 2t)}\right] \tag{B.8}$$

$$\varepsilon_{CHS} = \frac{t}{2(d - t)} \tag{B.9}$$

$$\varepsilon_{p0,2} = 0{,}002 + \frac{f_y}{E} \tag{B.10}$$

$$K = \frac{f_y}{\varepsilon_{p0,2}^{n_p}} \tag{B.11}$$

$$n_p = \frac{ln(f_y / f_u)}{ln(\varepsilon_{p0,2} / \varepsilon_u)} \tag{B.12}$$

in which

f_u is the ultimate strength of the basic material (i.e. the flat sheet or coil material out of which sections are made by cold forming, given in Table 2.2)

ε_u is the ultimate strain, corresponding to the ultimate strength f_u, given by Equations (C.6) and (C.7)

r_i is the internal corner radius, which may be taken as $2t$ if not known.

ii. Determination of total corner cross-sectional area $A_{c,pb}$ and $A_{c,rolled}$

$$A_{c,pb} = \left(n_c \pi \frac{t}{4} \right) \left(2r_i + t \right) \tag{B.13}$$

$$A_{c,rolled} = \left(n_c \pi \frac{t}{4} \right) \left(2r_i + t \right) + 4 n_c t^2 \tag{B.14}$$

where

n_c is the number of 90° corners in the section.

ANNEX C - MODELLING OF MATERIAL BEHAVIOUR

The stress-strain curve with strain hardening may be calculated from the following expressions:

$$\varepsilon = \frac{\sigma}{E} + 0,002\left[\frac{\sigma}{f_y}\right]^n \qquad \text{for } \sigma \le f_y \qquad \text{(C.1)}$$

$$\varepsilon = 0,002 + \frac{f_y}{E} + \frac{\sigma - f_y}{E_y} + \varepsilon_u\left[\frac{\sigma - f_y}{f_u - f_y}\right]^m \qquad \text{for } f_y < \sigma \le f_u \qquad \text{(C.2)}$$

where:

σ is the engineering stress

ε is the engineering strain

E, f_y and f_u are given in Section 2.3.1 or EN 10088

n is a coefficient that may be taken from Table 6.4 or calculated from measured properties, as follows:

$$n = \frac{ln(4)}{ln\left[\frac{f_y}{R_{p0,05}}\right]} \qquad \text{(C.3)}$$

in which

$R_{p0,05}$ is the 0,05% proof stress.

EN 1993-1-4 currently adopts the following less accurate expression for n which is based on the 0,01% proof stress, $R_{p0,01}$. It is expected that it will be replaced by Equation (C.3) in the next revision of EN 1993-1-4.

$$n = \frac{ln(20)}{ln\left[\frac{f_y}{R_{p0,01}}\right]} \qquad \text{(C.4)}$$

E_y is the tangent modulus of the stress-strain curve at the yield strength defined as:

$$E_y = \frac{E}{1 + 0,002n\left[\frac{E}{f_y}\right]} \qquad \text{(C.5)}$$

ε_u is the ultimate strain, corresponding to the ultimate strength f_u, which may be obtained from the approximation:

$$\varepsilon_u = 1 - \frac{f_y}{f_u}$$ for austenitic and duplex stainless steels (C.6)

$$\varepsilon_u = 0,6\left[1 - \frac{f_y}{f_u}\right]$$ for ferritic stainless steels (C.7)

but $\varepsilon_u \leq A$ where A is the elongation after fracture defined in EN 10088.

EN 1993-1-4 currently just gives Equation (C.6) but recent research has shown that this expression is inaccurate when applied to ferritic stainless steels, and it is expected that Equation (C.7) will be introduced into the next revision of EN 1993-1-4.

$$m = 1 + 2,8\frac{f_y}{f_u}$$ for all grades (C.8)

EN 1993-1-4 currently adopts the following less accurate expression for m. It is expected that it will be replaced by Equation (C.8) in the next revision of EN 1993-1-4.

$$m = 1 + 3,5\frac{f_y}{f_u}$$ (C.9)

Figure C.1 defines the key parameters in the material model.

Figure C.1 Key parameters in material model

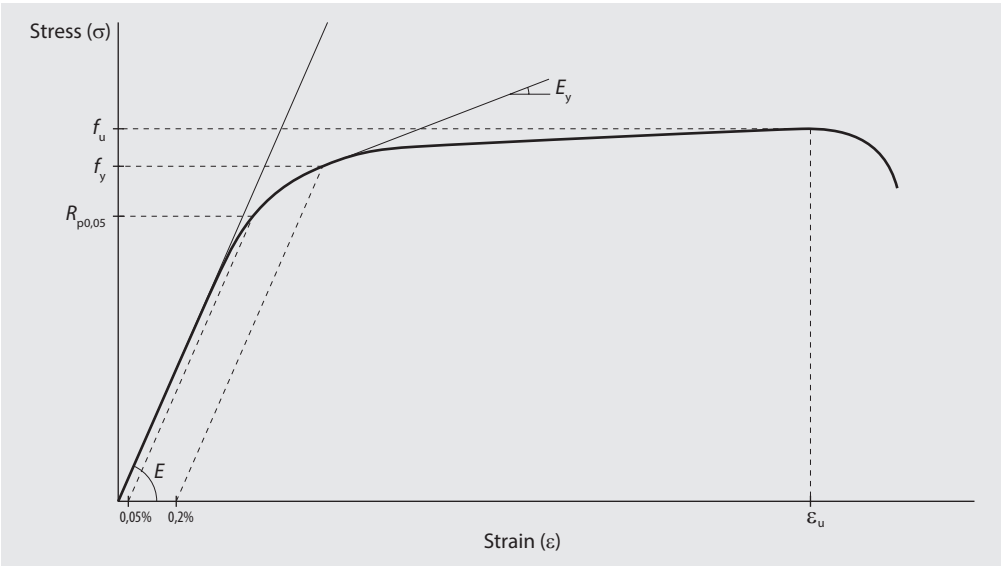

If measured values of f_y are available, f_u may be calculated from the following expressions:

$$\frac{f_y}{f_u} = 0,2 + 185\frac{f_y}{E}$$ for austenitic and duplex stainless steels (C.10)

$$\frac{f_y}{f_u} = 0,46 + 145\frac{f_y}{E}$$ for ferritic stainless steels (C.11)

In general, for design by Finite Element (FE) analysis, the nominal material properties should be adopted (Case 1 in Table C.1). For design by analysis utilising material data obtained from testing, reference may be made to Cases 2 to 4 in Table C.1, depending on which parameters have been measured.

Table C.1 Different cases for the definition of stress-strain curves

Type of FE analysis	E	f_y	f_u	ε_u	n	m
Case 1. Design using nominal properties	Section 2.3.1	Section 2.3.1	Section 2.3.1	Eq. (C.6) or (C.7)	Table 6.4	Eq. (C.8)
Case 2. Design using measured f_y only	Section 2.3.1	Measured	Eq. (C.10) or (C.11)	Eq. (C.6) or (C.7)	Table 6.4	Eq. (C.8)
Case 3. Design using measured E, f_y and f_u	Measured	Measured	Measured	Eq. (C.6) or (C.7)	Table 6.4	Eq. (C.8)
Case 4. Design/model validation using the full measured stress-strain curve, e.g. for FE model validation	Measured	Measured	Measured	Measured	Measured or fit using regression or Eq. (C.3)	Measured or fit using regression

The following expressions can be used for determining a true stress-strain curve from an engineering stress-strain curve:

$$\sigma_{true} = \sigma(1 + \varepsilon) \tag{C.12}$$

$$\varepsilon_{true} = ln(1 + \varepsilon) \tag{C.13}$$

Some commercial software for FE analysis requires material definitions based on the plastic portion of the material model. For those cases, stresses and strains starting at the proportional limit of the material should be provided. The plastic strain corresponding to each stress level can be calculated from Equation (C.14) and the proportional limit can be assumed to be the stress corresponding to a plastic strain equal to $\varepsilon_{pl} = 1 \times 10^{-4}$.

$$\varepsilon_{pl} = \varepsilon - \frac{f_y}{E} \tag{C.14}$$

ANNEX D - CONTINUOUS STRENGTH METHOD

D.1 General

The Continuous Strength Method (CSM) is a deformation-based design approach that takes into account the benefits of strain hardening and element interaction for determining cross-section resistances. The CSM elastic, linear hardening material model is specified in Section D.2, while the CSM base curves for the determination of the cross-section deformation capacity under the applied loading are given in Section D.3. Sections D.4, D.5 and D.6 provide the design formulae for cross-section resistances.

This annex applies to the cross-section resistances of sections comprising flat plates (e.g. doubly symmetric I-sections, RHS, mono-symmetric channel and T-sections, and asymmetric angle sections) and CHS subjected to both isolated and combined loading conditions. For symmetrical sections, the CSM shows significant advantages over the cross-section design rules give in Section 5 for low cross-section slenderness, but little advantage for cross-section slenderness greater than 0,68 for plated sections or 0,30 for CHS. For asymmetrical sections, the CSM can show significant advantages across the full range of cross-section slenderness.

For cold formed cross-sections, the average enhanced yield strength of the cross-section f_{ya} from ANNEX B may be used in place of f_y in this annex.

This annex applies only to static design at ambient temperatures. Serviceability considerations may govern the design, and should also be assessed.

D.2 Material modelling

The CSM elastic, linear hardening material model, featuring three material coefficients (C_1, C_2 and C_3), is shown in Figure D.1 and the material coefficients are given in Table D.1.

Figure D.1 CSM elastic, linear hardening material model

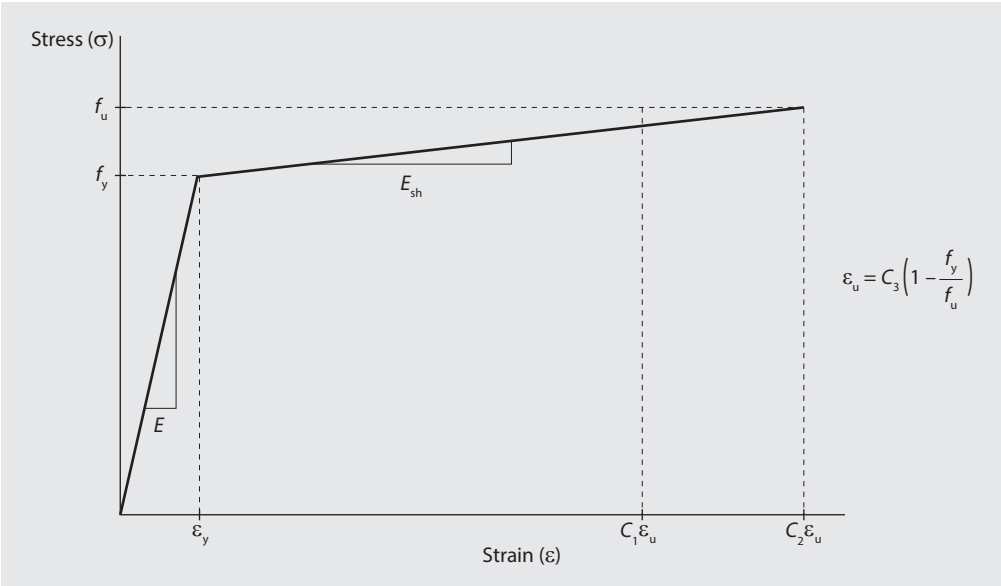

The terms are defined as:

f_y is the yield strength

ε_y is the yield strain, taken as $\varepsilon_y = f_y / E$

E is the modulus of elasticity

E_{sh} is the strain hardening modulus

f_u is the ultimate strength

ε_u is the ultimate strain, corresponding to the ultimate strength f_u, taken as $C_3(1 - f_y / f_u)$

Table D.1 CSM material model coefficients

Stainless steel	C_1	C_2	C_3
Austenitic	0,10	0,16	1,00
Duplex	0,10	0,16	1,00
Ferritic	0,40	0,45	0,60

The strain hardening modulus is determined from:

$$E_{sh} = \frac{f_u - f_y}{C_2 \varepsilon_u - \varepsilon_y} \tag{D.1}$$

D.3 Cross-section deformation capacity

D.3.1 Base curve

The base curve defines the relationship between the normalised cross-section deformation capacity $\varepsilon_{csm} / \varepsilon_y$, which is required for the determination of cross-section resistance and the slenderness of the cross-section. The base curve is given by Equations (D.2) and (D.3) for plated sections and CHS, respectively.

$$\frac{\varepsilon_{csm}}{\varepsilon_y} = \begin{cases} \dfrac{0,25}{\bar{\lambda}_p^{3,6}} \le \min\left(15, \dfrac{C_1 \varepsilon_u}{\varepsilon_y}\right) & \text{for } \bar{\lambda}_p \le 0,68 \\ \left(1 - \dfrac{0,222}{\bar{\lambda}_p^{1,050}}\right)\dfrac{1}{\bar{\lambda}_p^{1,050}} & \text{for } \bar{\lambda}_p > 0,68 \end{cases} \tag{D.2}$$

$$\frac{\varepsilon_{csm}}{\varepsilon_y} = \begin{cases} \dfrac{4,44 \times 10^{-3}}{\bar{\lambda}_c^{4,5}} \le \min\left(15, \dfrac{C_1 \varepsilon_u}{\varepsilon_y}\right) & \text{for } \bar{\lambda}_c \le 0,30 \\ \left(1 - \dfrac{0,224}{\bar{\lambda}_c^{0,342}}\right)\dfrac{1}{\bar{\lambda}_c^{0,342}} & \text{for } \bar{\lambda}_c > 0,30 \end{cases} \tag{D.3}$$

where

$\bar{\lambda}_p$ is the cross-section slenderness for plated sections

$\bar{\lambda}_c$ is the cross-section slenderness for circular hollow sections

D.3.2 Cross-section slenderness

The cross-section slenderness is given by:

$\bar{\lambda}_p = \sqrt{f_y / f_{cr,p}}$ for plated sections

$\bar{\lambda}_c = \sqrt{f_y / f_{cr,c}}$ for CHS

For plated sections, the elastic buckling stress of the full cross-section under the applied loading may be determined numerically (e.g. using the finite strip software CUFSM, available at www.ce.jhu.edu/bschafer/cufsm), or conservatively calculated as the elastic buckling stress of the most slender constituent plate element of the cross-section:

$$f_{cr,p} = \frac{k_\sigma \pi^2 E t^2}{12\left(1 - \upsilon^2\right)\bar{b}^2} \tag{D.4}$$

where

$\bar{b}$ is the plate element flat width

t is the plate element thickness

υ is the Poisson's ratio

k_σ is the buckling factor corresponding to the stress ratio ψ and boundary conditions as given in Table 5.3 and Table 5.4 for internal and outstand elements.

For CHS, the elastic bucking stress of the full section for compression, bending or combinations thereof, may be calculated from:

$$f_{cr,c} = \frac{E}{\sqrt{3\left(1 - \upsilon^2\right)}} \frac{2t}{D} \tag{D.5}$$

where

D is the cross-section diameter

t is the cross-section thickness.

D.4 Cross-section compression resistance

For plated sections with $\bar{\lambda}_p \leq 0,68$ and for CHS with $\bar{\lambda}_c \leq 0,30$, corresponding to $\varepsilon_{csm}/\varepsilon_y \geq 1,0$, the cross-section compression resistance is determined as:

$$N_{c,Rd} = N_{csm,Rd} = \frac{Af_{csm}}{\gamma_{M0}} \tag{D.6}$$

where

A is the cross-sectional area

f_{csm} is the design stress corresponding to ε_{csm}, given by:

$$f_{csm} = f_y + E_{sh}\varepsilon_y\left(\frac{\varepsilon_{csm}}{\varepsilon_y} - 1\right) \tag{D.7}$$

For plated sections with $\bar{\lambda}_p > 0,68$ and for CHS with $\bar{\lambda}_c > 0,30$, corresponding to $\varepsilon_{csm}/\varepsilon_y < 1,0$, the cross-section compression resistance is determined as:

$$N_{c,Rd} = N_{csm,Rd} = \frac{\varepsilon_{csm}}{\varepsilon_y}\frac{Af_y}{\gamma_{M0}} \tag{D.8}$$

D.5 Cross-section bending resistance

D.5.1 Bending about an axis of symmetry

For doubly symmetric sections (e.g. I-sections, RHS, and CHS) and mono-symmetric sections (channel sections and T-sections) in bending about an axis of symmetry, the maximum attainable strain ε_{csm} is determined from Equations (D.2) or (D.3).

For sections with $\varepsilon_{csm}/\varepsilon_y \geq 1,0$, the cross-section bending resistance may be determined as:

$$M_{c,Rd} = M_{csm,Rd} = \frac{W_{pl}f_y}{\gamma_{M0}}\left[1 + \frac{E_{sh}}{E}\frac{W_{el}}{W_{pl}}\left(\frac{\varepsilon_{csm}}{\varepsilon_y} - 1\right) - \left(1 - \frac{W_{el}}{W_{pl}}\right)\Big/\left(\frac{\varepsilon_{csm}}{\varepsilon_y}\right)^{\alpha}\right] \tag{D.9}$$

where

W_{el} is the cross-section elastic section modulus

W_{pl} is the cross-section plastic section modulus

α is the CSM bending parameter, as given in Table D.2

For sections with $\varepsilon_{csm}/\varepsilon_y < 1,0$, the cross-section bending resistance is determined as:

$$M_{c,Rd} = M_{csm,Rd} = \frac{\varepsilon_{csm}}{\varepsilon_y}\frac{W_{el}f_y}{\gamma_{M0}} \tag{D.10}$$

D.5.2 Bending about an axis that is not one of symmetry

For asymmetric (angle) sections and mono-symmetric (channel) sections in bending about an axis that is not one of symmetry, the maximum attainable compressive strain $\varepsilon_{csm,c}$ is determined from Equation (D.2) (i.e. $\varepsilon_{csm,c} = \varepsilon_{csm}$, while the corresponding outer-fibre tensile strain $\varepsilon_{csm,t}$ is calculated on the basis of the assumption of a linearly-varying

through-depth strain distribution and the design neutral axis located at the elastic neutral axis (ENA). The maximum design strain $\varepsilon_{csm,max}$ is taken as the maximum of $\varepsilon_{csm,c}$ and $\varepsilon_{csm,t}$.

If $\varepsilon_{csm,max}$ is less than the yield strain ε_y, use of the ENA is appropriate and the design bending moment resistance is calculated from Equation (D.10), with $\varepsilon_{csm} = \varepsilon_{csm,max}$.

If $\varepsilon_{csm,max}$ is greater than the yield strain ε_y, the design neutral axis is changed from the previously assumed ENA to the location dictated by cross-section equilibrium or, as an approximation, the mid-point between the elastic and plastic neutral axes; $\varepsilon_{csm,t}$ and $\varepsilon_{csm,max}$ may then be recalculated, and the corresponding bending moment resistance is determined from Equation (D.9), in which $\varepsilon_{csm} = \varepsilon_{csm,max}$ and the values of the bending coefficient α for each type of non-doubly symmetric section in bending about an axis that is not one of symmetry is taken from Table D.2.

Table D.2 CSM bending parameter α

Cross-section type	Axis of bending	Aspect ratio	α
RHS	Any	Any	2,0
CHS	Any	–	2,0
I-section	*y-y*	Any	2,0
	z-z	Any	1,2
Channel section	*y-y*	Any	2,0
	z-z	$h/b \leq 2$	1,5
		$h/b > 2$	1,0
T-section	*y-y*	$h/b < 1$	1,0
		$h/b \geq 1$	1,5
	z-z	Any	1,2
Angle	*y-y*	Any	1,5
	z-z	Any	1,0

D.6 Cross-section resistance under combined compression and bending moment

D.6.1 RHS subject to combined loading

For RHS with $\bar{\lambda}_p \leq 0{,}60$, the design interaction formulae for cross-sections subjected to major axis, minor axis and biaxial bending plus compression are given by Equations (D.11) to (D.13):

$$M_{y,Ed} \leq M_{R,csm,y,Rd} = M_{csm,y,Rd} \frac{(1-n_{csm})}{(1-0{,}5a_w)} \leq M_{csm,y,Rd} \tag{D.11}$$

$$M_{z,Ed} \leq M_{R,csm,z,Rd} = M_{csm,z,Rd} \frac{(1-n_{csm})}{(1-0{,}5a_f)} \leq M_{csm,z,Rd} \tag{D.12}$$

$$\left[\frac{M_{y,Ed}}{M_{R,csm,y,Rd}}\right]^{\alpha_{csm}} + \left[\frac{M_{z,Ed}}{M_{R,csm,z,Rd}}\right]^{\beta_{csm}} \leq 1 \tag{D.13}$$

where

$M_{y,Ed}$ is the design bending moment about major (*y-y*) axis

$M_{z,Ed}$ is the design bending moment about minor (*z-z*) axis

$M_{R,csm,y,Rd}$ is the reduced CSM bending moment resistance about major (*y-y*) axis

$M_{R,csm,z,Rd}$ is the reduced CSM bending moment resistance about minor (*z-z*) axis

a_w is the ratio of the web area to the gross cross-section area

a_f is the ratio of the flange area to the gross cross-section area

n_{csm} is the ratio of the design compression force N_{Ed} to CSM cross-section compression resistance $N_{csm,Rd}$

α_{csm} and β_{csm} are the interaction coefficient for biaxial bending, equal to $1{,}66/(1-1{,}13\,n_{csm}{}^2)$

For RHS with $\bar{\lambda}_p > 0{,}60$, the linear design interaction formulae is given as:

$$\frac{N_{Ed}}{N_{csm,Rd}} + \frac{M_{y,Ed}}{M_{csm,y,Rd}} + \frac{M_{z,Ed}}{M_{csm,z,Rd}} \leq 1 \qquad \text{(D.14)}$$

D.6.2 CHS subject to combined loading

For CHS with $\bar{\lambda}_c \leq 0{,}27$, the design interaction formula for cross-sections under combined bending and compression is given as:

$$M_{Ed} \leq M_{R,csm,Rd} = M_{csm,Rd}\left(1 - n_{csm}{}^{1,7}\right) \qquad \text{(D.15)}$$

For CHS with $\bar{\lambda}_c > 0{,}27$, the linear design interaction formulae is given as:

$$\frac{N_{Ed}}{N_{csm,Rd}} + \frac{M_{Ed}}{M_{csm,Rd}} \leq 1 \qquad \text{(D.16)}$$

ANNEX E - ELASTIC CRITICAL MOMENT FOR LATERAL TORSIONAL BUCKLING

E.1 General

For cross-sections which are symmetric about the bending plane, the elastic critical moment M_{cr} may be calculated by the method given in Section E.2. For cases not covered by this method, M_{cr} may be determined by a buckling analysis of the beam, provided that the calculation accounts for all the parameters liable to affect the value of M_{cr}:

- geometry of the cross-section,
- warping rigidity,
- position of the transverse loading with regard to the shear centre,
- restraint conditions.

Software for the calculation of the critical moment M_{cr} may be downloaded free of charge from the following web sites: www.cticm.com and www.steelconstruction.info/Design_software_and_tools.

E.2 Cross-sections symmetric about the bending plane

This method only applies to uniform straight members for which the cross-section is symmetric about the bending plane. The conditions of restraint at each end are at least:

- restrained against lateral movement,
- restrained against rotation about the longitudinal axis.

M_{cr} may be calculated from the following formula derived from buckling theory:

$$M_{cr} = C_1 \frac{\pi^2 EI_z}{(kL)^2} \left\{ \sqrt{\left(\frac{k}{k_w}\right)^2 \frac{I_w}{I_z} + \frac{(kL)^2 GI_t}{\pi^2 EI_z} + (C_2 z_g)^2} - C_2 z_g \right\} \quad \text{(E.1)}$$

where:

I_t	is the torsion constant
I_w	is the warping constant
I_z	is the second moment of area about minor axis
k and k_w	are effective length factors
L	is the length of beam between points which have lateral restraint
z_g	is the distance between the point of load application and the shear centre Note: for doubly symmetric sections, the shear centre coincides with the centroid.

C_1 is the equivalent uniform moment factor and accounts for the shape of the bending moment diagram

C_2 is a parameter associated with the load level and is dependent on the shape of the bending moment diagram

The factor k is related to end rotation on plan. It is analogous to the ratio of the buckling length to the system length for a compression member. k should not be taken as less than 1,0 without clear justification.

The factor k_w is related to end warping. Unless special provision for warping fixity is made, k_w should be taken as 1,0.

In the common case of normal support conditions at the ends (fork supports), k and k_w are taken equal to 1,0.

In the general case, z_g is positive for loads acting towards the shear centre from their point of application.

E.3 C_1 and C_2 factors

The distribution of bending moments along the length of a beam influences the value of the elastic critical moment. Allowance for the variation of bending moments on the elastic buckling moment M_{cr} of a beam may be made by means of the equivalent uniform moment factor C_1. Uniform bending moment is the most severe scenario, for which $C_1 = 1{,}0$. Taking $C_1 = 1{,}0$ is also conservative for other patterns of moment, but may become overly conservative when the bending moment distribution varies significantly from uniform.

Factor C_2 becomes relevant when a beam is subject to destabilising loads. Loads applied above the shear centre of the beam have a “destabilising” effect, resulting in lower values of M_{cr}, while loads applied below the shear centre have a “stabilising” effect, resulting in higher values of M_{cr}.

Table E.1 and Table E.2 give values for factors C_1 and C_2.

Table E.1 Values of C_1 for end moment loading (for $k = 1{,}0$)

End moment and support conditions	ψ	C_1
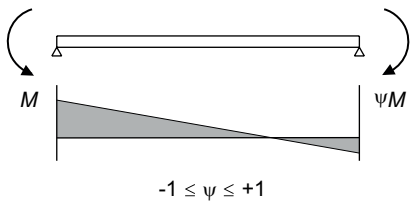	+1,00	1,00
	+0,75	1,17
	+0,50	1,36
	+0,25	1,56
	0,00	1,77
	-0,25	2,00
	-0,50	2,24
	-0,75	2,49
	-1,00	2,76

Table E.2
Values of C_1 and C_2 for cases with transverse loading (for $k = 1,0$)

Loading and support conditions	Bending moment diagram	C_1	C_2
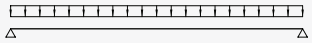		1,13	0,454
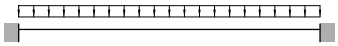		2,60	1,55
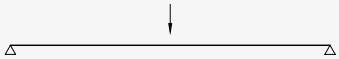	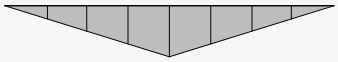	1,35	0,630
	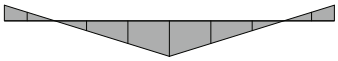	1,69	1,65

PART II - DESIGN EXAMPLES

This part of the Design Manual gives fifteen design examples that illustrate the application of the design rules. The examples are:

Design example 1
A circular hollow section subject to axial compression.

Design example 2
A welded I-beam with a Class 4 cross-section subject to combined axial compression and bending.

Design example 3
Trapeziodal roof sheeting with a Class 4 cross-section subject to bending.

Design example 4
A welded hollow section joint subject to fatigue loading.

Design example 5
A welded joint.

Design example 6
A bolted joint.

Design example 7
A plate girder with a Class 4 cross-section subject to bending. Shear buckling is critical.

Design example 8
A plate girder with a Class 4 cross-section subject to bending. Resistance to transverse loads is critical.

Design example 9
A cold formed channel subject to bending with intermediate lateral restraints to the compression flange. Lateral torsional buckling between intermediate lateral restraints is critical.

Design example 10
A rectangular hollow section subject to combined axial compression and bending with 30 minutes fire resistance.

Design example 11
Trapezoidal roof sheeting with a Class 4 cross-section subject to bending – a comparison of designs with cold worked material and annealed material.

Design example 12
A lipped channel from cold worked material in an exposed floor subject to bending.

Design example 13
A stainless steel lattice girder from cold worked material subject to combined axial compression and bending with 30 minutes fire resistance.

Design example 14
The enhanced average yield strength of a cold-rolled square hollow section is determined in accordance with the method in Annex B.

Design example 15

The bending resistance of a cold-rolled square hollow section is determined in accordance with the Continuous Strength Method (CSM) given in Annex D.

The sheeting in example 3 is from ferritic stainless steel grade 1.4003. The plate girders in examples 7 and 8 are from duplex stainless steel grade 1.4462. The members in the other examples are from austenitic stainless steel grades 1.4301 or 1.4401.

The references in the margin of the design examples are to text sections and expressions/equations in this publication, unless specifically noted otherwise.

Promotion of new Eurocode rules for structural stainless steels (PUREST) CALCULATION SHEET				Sheet 1 of 2
	Title	Design Example 1 – CHS Column		
	Client	Research Fund for Coal and Steel	Made by HS	Date 07/02
			Revised by JBL	Date 03/06
			Revised by FW	Date 05/17

DESIGN EXAMPLE 1 – CHS COLUMN

The circular hollow section column to be designed is an interior column of a multi-storey building. The column is simply supported at its ends. The inter-storey height is 3,50 m.

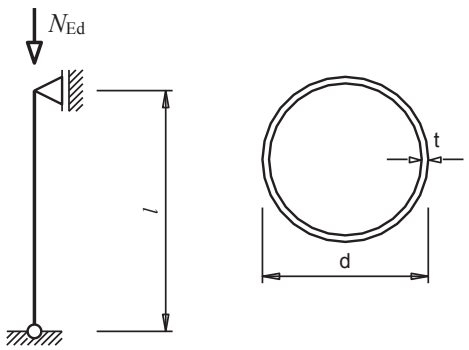

Structure

Simply supported column, length between supports:

l = 3,50 m

Actions

Permanent and variable actions result in a vertical design compression force equal to:

N_{Ed} = 250 kN

Cross-section properties

Try a 159 × 4 cold-formed CHS, austenitic grade 1.4307.

Geometric properties

d	= 159 mm	t	= 4,0 mm
A	= 19,5 cm²	I	= 585,3 cm^4
W_{el}	= 73,6 cm^3	W_{pl}	= 96,1 cm^3

Material properties

Take f_y = 220 N/mm^2 (for cold-rolled strip). — Table 2.2

E = 200000 N/mm^2 and G = 76900 N/mm^2 — Section 2.3.1

Classification of the cross-section

ε = 1,01 — Table 5.2

Section in compression : $d/t = 159/4 = 39{,}8$

For Class 1, $d/t \leq 50\varepsilon^2$, therefore the section is Class 1.

Compression resistance of the cross-section — Section 5.7.3

For a Class 1 cross-section:

$$N_{\mathrm{c,Rd}} = A_{\mathrm{g}} f_{\mathrm{y}} / \gamma_{\mathrm{M0}}$$ — Eq. 5.27

$$N_{\mathrm{c,Rd}} = \frac{19{,}5 \times 220 \times 10^{-1}}{1{,}1} = 390 \text{ kN}$$

Resistance to flexural buckling — Section 6.3.3

$$N_{\mathrm{b,Rd}} = \chi A f_{\mathrm{y}} / \gamma_{\mathrm{M1}}$$ — Eq. 6.2

$$\chi = \frac{1}{\phi + \left[\phi^2 - \bar{\lambda}^2\right]^{0{,}5}} \leq 1$$ — Eq. 6.4

$$\varphi = 0{,}5(1 + \alpha\left(\bar{\lambda} - \bar{\lambda}_0\right) + \bar{\lambda}^2)$$ — Eq. 6.5

Calculate the elastic critical buckling load:

$$N_{\mathrm{cr}} = \frac{\pi^2 EI}{{L_{\mathrm{cr}}}^2} = \frac{\pi^2 \times 200000 \times 585{,}3 \times 10^4}{(3{,}50 \times 10^3)^2} \times 10^{-3} = 943{,}1 \text{ kN}$$

Calculate the flexural buckling slenderness:

$$\bar{\lambda} = \sqrt{\frac{19{,}5 \times 10^2 \times 220}{943{,}1 \times 10^3}} = 0{,}67$$ — Eq. 6.6

Using an imperfection factor $\alpha = 0{,}49$ and $\bar{\lambda}_0 = 0{,}2$ for a cold-formed austenitic stainless steel CHS: — Table 6.1

$$\phi = 0{,}5 \times (1 + 0{,}49 \times (0{,}67 - 0{,}2) + 0{,}67^2) = 0{,}84$$

$$\chi = \frac{1}{0{,}84 + [0{,}84^2 - 0{,}67^2]^{0{,}5}} = 0{,}74$$

$$N_{\mathrm{b,Rd}} = 0{,}74 \times 19{,}5 \times 220 \times \frac{10^{-1}}{1{,}1} = 288{,}6 \text{ kN}$$

The applied axial load is $N_{\mathrm{Ed}} = 250$ kN.

Thus the member has adequate resistance to flexural buckling.

Promotion of new Eurocode rules for structural stainless steels (PUREST)				Sheet 1 of 4
	Title	Design Example 2 – Welded I-section beam-column with lateral restraints		
CALCULATION SHEET	Client	Research Fund for Coal and Steel	Made by HS	Date 07/02
			Revised by JBL	Date 03/06
			Revised by FW	Date 06/17

DESIGN EXAMPLE 2 – WELDED I-SECTION BEAM-COLUMN WITH LATERAL RESTRAINTS

The beam-column to be designed is a welded I-section, simply supported at its ends. Minor axis buckling is prevented by lateral restraints. The inter-storey height is equal to 3,50 m. The column is loaded by a vertical single load with an eccentricity to the major axis.

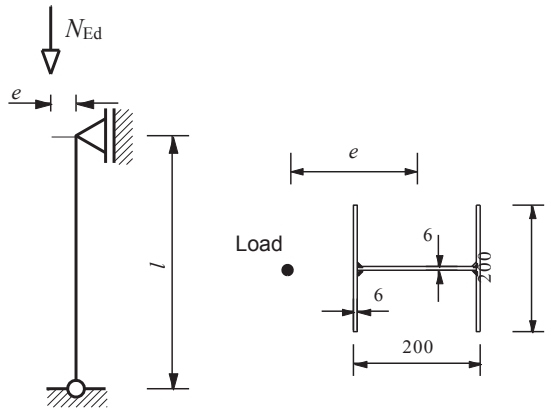

Structure

Simply supported column, length between supports:

l = 3,50 m

Eccentricity of the load:

e = 200 mm

Actions

Permanent and variable actions result in a vertical design compression force equal to:

N_{Ed} = 120 kN

Structural analysis

Maximum bending moment occurs at the top of the column:

$M_{y,max\,Ed}$ = 120×0,20 = 24 kNm

Cross-section properties

Try a doubly-symmetric welded I-section 200 × 200, thickness = 6,0 mm, austenitic grade 1.4401.

Geometric properties

b	= 200 mm	t_f	= 6,0 mm	$W_{el,y}$	= 259,1 cm^3
h_w	= 188 mm	t_w	= 6,0 mm	$W_{pl,y}$	= 285,8 cm^3
a	= 3,0 mm (weld thickness)	I_y	= 2591,1 cm^4		
A_g	= 35,3 cm²	i_y	= 8,6 cm		

Material properties

f_y = 220 N/mm^2 (for hot-rolled strip). — Table 2.2

E = 200000 N/mm^2 and G = 76900 N/mm^2 — Section 2.3

Classification of the cross-section — Table 5.2

ε = 1,01

Web subject to compression:

$$c/t = \frac{(188 - 3 - 3)}{6} = 30{,}3$$

For Class 1, $c/t \leq 33{,}0\varepsilon$, therefore web is Class 1.

Outstand flange subject to compression:

$$c/t = \frac{(200/2 - 6/2 - 3)}{6} = 94/6 = 15{,}7$$

For Class 3, $c/t \leq 14{,}0\varepsilon$, therefore outstand flange is Class 4.

Therefore, overall classification of cross-section is Class 4.

Effective section properties

Web is fully effective; calculate the reduction factor ρ for welded outstand elements:

$$\rho = \frac{1}{\bar{\lambda}_p} - \frac{0{,}188}{\bar{\lambda}_p^{\,2}} \text{ but } \leq 1$$ — Eq. 5.2

$$\bar{\lambda}_p = \frac{\bar{b}/t}{28{,}4\varepsilon\sqrt{k_\sigma}} \quad \text{where } \bar{b} = c = 94 \text{ mm}$$ — Eq. 5.3

Assuming a uniform stress distribution within the compression flange:

$$\psi = \frac{\sigma_2}{\sigma_1} = 1$$

$\Rightarrow k_\sigma = 0{,}43$ — Table 5.4

$$\bar{\lambda}_p = \frac{94/6}{28{,}4 \times 1{,}01 \times \sqrt{0{,}43}} = 0{,}833$$

$$\rho = \frac{1}{\bar{\lambda}_p} - \frac{0{,}188}{\bar{\lambda}_p^{\,2}} = \frac{1}{0{,}833} - \frac{0{,}188}{0{,}833^2} = 0{,}93$$

$$b_{\text{eff}} = 0{,}93 \times 94 = 87{,}4 \text{ mm}$$

Calculate the effective cross-section for compression only:

$$A_{\text{eff}} = A_g - 4(1-\rho)ct = 35{,}3 - 4 \times (1 - 0{,}93) \times 94 \times 6 \times 10^{-2} = 33{,}7 \text{ cm}^2$$

Calculate the effective cross-section for major axis bending:

$$A_{\text{eff}} = A_g - 2(1-\rho)ct = 35{,}3 - 2 \times (1 - 0{,}93) \times 94 \times 6 \times 10^{-2} = 34{,}5 \text{ cm}^2$$

Taking area moments about the neutral axis of the gross cross-section, calculate the shift in the position of the neutral axis:

$$\bar{z}' = \frac{2(1-\rho)ct(h_w + t_f)/2}{A_{eff}} = \frac{2 \times (1-0{,}93) \times 94 \times 6 \times (188+6)/2}{34{,}5 \times 10^{-2}}$$

= 2,2 mm shifted in the direction away from the compression flange

Calculate the effective second moment of inertia for major axis bending:

$$I_{eff,y} = I_y - 2(1-\rho)ct\left[\frac{t^2}{12} + \frac{(h_w + t_f)^2}{4}\right] - \bar{z}'^2 A_{eff}$$

$$I_{eff,y} = 2591{,}1 - 2 \times (1-0{,}93) \times 94 \times 6 \times \left[\frac{6^2}{12} + \frac{(188+6)^2}{4}\right] \times 10^{-4} - (2{,}2)^2 \times 34{,}5 \times 10^{-2}$$

$$I_{eff,y} = 2515{,}1 \text{ cm}^4$$

$$W_{eff,y} = \frac{I_{eff,y}}{\frac{h_w}{2} + t_f + \bar{z}'} = \frac{2515{,}1}{\frac{18{,}8}{2} + 0{,}6 + 0{,}22} = 246{,}1 \text{ cm}^3$$

Resistance to major axis flexural buckling

$N_{b,Rd} = \chi A_{eff} f_y / \gamma_{M1}$ — Eq. 6.3

$A_{eff} = 33{,}7 \text{ cm}^2$ for Class 4 cross-section subject to compression

$$\chi = \frac{1}{\varphi + \left[\varphi^2 - \bar{\lambda}^2\right]^{0,5}} \leq 1$$ — Eq. 6.4

$$\varphi = 0{,}5(1 + \alpha(\bar{\lambda} - \bar{\lambda}_0) + \bar{\lambda}^2)$$ — Eq. 6.5

$$\bar{\lambda} = \sqrt{\frac{A_{eff} f_y}{N_{cr}}}$$ — Eq. 6.7

$L_{cr} = 350$ cm (buckling length is equal to actual length)

$$N_{cr} = \frac{\pi^2 EI}{L_{cr}^2} = \frac{\pi^2 \times 200000 \times 2591{,}1 \times 10^4}{350^2 \times 10^2} \times 10^{-3} = 4175{,}2 \text{ kN}$$

$$\bar{\lambda} = \sqrt{\frac{33{,}7 \times 10^2 \times 220}{4175{,}2 \times 10^3}} = 0{,}421$$

Using imperfection factor $\alpha = 0{,}49$ and $\bar{\lambda}_0 = 0{,}2$ for welded open sections, buckling about the major axis: — Table 6.1

$$\varphi = 0{,}5 \times (1 + 0{,}49 \times (0{,}421 - 0{,}2) + 0{,}421^2) = 0{,}643$$

$$\chi = \frac{1}{0{,}643 + [0{,}643^2 - 0{,}421^2]^{0,5}} = 0{,}886$$

$$N_{b,Rd,y} = 0{,}886 \times 33{,}7 \times 10^2 \times 220 \times 10^{-3} / 1{,}1 = 597{,}23 \text{ kN}$$

Resistance to axial compression and uniaxial major axis moment

$$\frac{N_{\mathrm{Ed}}}{\left(N_{\mathrm{b,Rd}}\right)_{\min}} + k_{\mathrm{y}} \frac{M_{\mathrm{y,Ed}} + N_{\mathrm{Ed}} e_{\mathrm{Ny}}}{\beta_{\mathrm{W,y}}\, W_{\mathrm{pl,y}}\, f_{\mathrm{y}}/\gamma_{\mathrm{M1}}} \leq 1$$ Eq. 6.56

$\beta_{\mathrm{W,y}}$ = $W_{\mathrm{eff}}/W_{\mathrm{pl,y}}$ for a Class 4 cross -section

= 246,1/285,8 = 0,861

e_{Ny} is zero, due to the symmetry of the cross-section

$$k_{\mathrm{y}} = 1{,}0 + 2\left(\bar{\lambda}_{\mathrm{y}} - 0{,}5\right)\frac{N_{\mathrm{Ed}}}{N_{\mathrm{b,Rd,y}}} = 1{,}0 + 2 \times (0{,}421 - 0{,}5) \times \frac{120{,}0}{597{,}23} = 0{,}968$$ Eq. 6.61

$$1{,}2 + \frac{2N_{\mathrm{Ed}}}{N_{\mathrm{b,Rd,y}}} = 1{,}2 + \frac{2 \times 120}{597{,}23} = 1{,}60$$

but $1{,}2 \leq k_{\mathrm{y}} \leq 1{,}60$

$\therefore k_{\mathrm{y}} = 1{,}2$

$$\frac{120{,}0}{597{,}23} + 1{,}2 \times \frac{24{,}0 \times 10^6}{0{,}861 \times 285{,}8 \times 10^3 \times 220/1{,}1} = 0{,}786 \leq 1$$

Thus the member has adequate resistance.

DESIGN EXAMPLE 3 – DESIGN OF A TWO-SPAN TRAPEZOIDAL ROOF SHEETING

This example considers the design of a two-span trapezoidal sheeting. The material is ferritic grade 1.4003 stainless steel and the material thickness is 0,6 mm. The dimensions of the cross-section are shown below.

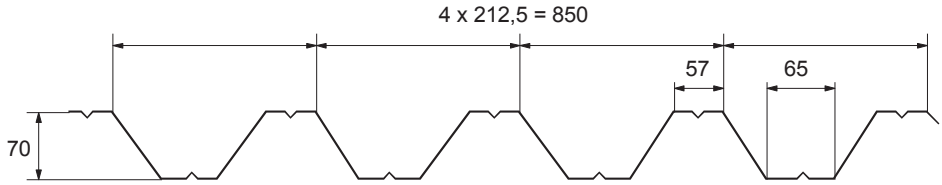

The example shows the following design tasks:
- determination of effective section properties at the ultimate limit state;
- determination of the bending resistance of the section;
- determination of the resistance at the intermediate support;
- determination of deflections at serviceability limit state.

Design data

Spans	L	=	2900 mm	
Width supports	s_s	=	100 mm	
Design load	Q	=	1,4 kN/m^2	
Self-weight	G	=	0,07 kN/m^2	
Design thickness	t	=	0,6 mm	
Yield strength	f_y	=	280 N/mm^2	Table 2.2
Modulus of elasticity	E	=	200000 N/mm^2	Section 2.3.1
Partial safety factor	γ_{M0}	=	1,1	Table 4.1
Partial safety factor	γ_{M1}	=	1,1	Table 4.1
Load factor	γ_G	=	1,35	Section 4.3
Load factor	γ_Q	=	1,5	Section 4.3

Symbols and detailed dimensions used in calculations are shown in the figure below. The position of the cross-section is given so that in bending at the support the upper flange is compressed.

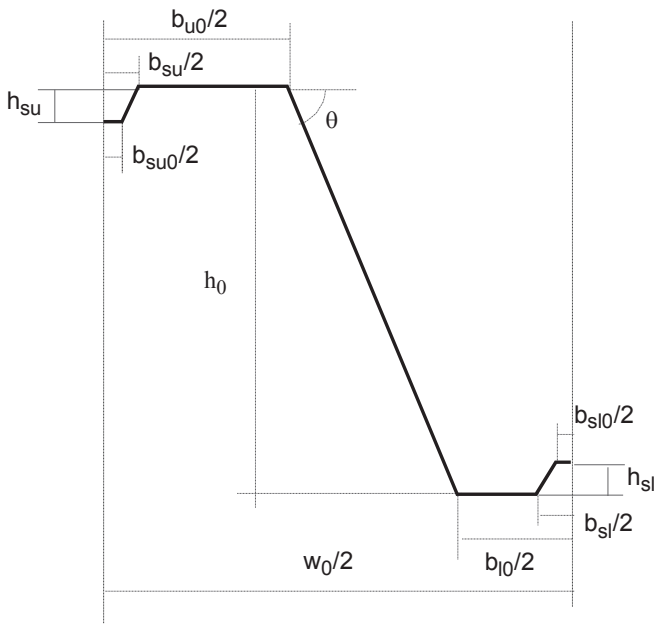

Mid line dimensions:

$h_0 = 70$ mm
$w_0 = 212{,}5$ mm
$b_{u0} = 65$ mm
$b_{l0} = 57$ mm
$b_{su} = 20$ mm
$b_{su0} = 8$ mm
$h_{su} = 6$ mm
$b_{sl} = 20$ mm
$b_{s10} = 8$ mm
$h_{sl} = 6$ mm

$r = 2$ mm (internal radius of the corners)

Angle of the web:

$$\theta = \text{atan}\left|\frac{h_0}{0{,}5(w_0 - b_{u0} - b_{l0})}\right| = \text{atan}\left|\frac{70}{0{,}5 \times (212{,}5 - 65 - 57)}\right| = 57{,}1°$$

Effective section properties at the ultimate limit state (ULS) — Section 5.2

Check on maximum width to the thickness ratios:

$h_0/t = 70/0{,}6 = 117 \leq 400\sin\theta = 336$ — Table 5.1

$\max(b_{l0}/t\,;\, b_{u0}/t) = b_{u0}/t = 65/0{,}6 = 108 \leq 400$ — Table 5.1

Angle of the web and corner radius:

$45° \leq \theta = 57{,}1° \leq 90°$

$$b_p = \frac{b_{u0} - b_{su}}{2} = \frac{65 - 20}{2} = 22{,}5 \text{ mm}$$

The influence of rounded corners on cross-section resistance may be neglected if the internal radius $r \leq 5t$ and $r \leq 0{,}10 b_p$

$r = 2 \text{ mm} \leq \min(5t\,;\, 0{,}1 b_p) = \min(5 \times 0{,}6; 0{,}1 \times 22{,}5) = 2{,}25$ mm — Section 5.6.2

The influence of rounded corners on cross-section resistance may be neglected.

Location of the centroidal axis when the web is fully effective

Calculate reduction factor ρ for effective width of the compressed flange:

$$\rho = \frac{0{,}772}{\bar{\lambda}_p} - \frac{0{,}079}{\bar{\lambda}_p^2} \text{ but } \leq 1$$ — Section 5.4.1 Eq. 5.1

where

$$\bar{\lambda}_p = \frac{\bar{b}/t}{28{,}4\varepsilon\sqrt{k_\sigma}}$$ — Eq. 5.3

$\bar{b} = b_p = 22{,}5$ mm

$\psi = 1 \Rightarrow k_\sigma = 4$ — Table 5.3

$$\varepsilon = \left[\frac{235}{f_y}\frac{E}{210\,000}\right]^{0,5} = \left[\frac{235}{280}\times\frac{200\,000}{210\,000}\right]^{0,5} = 0{,}894$$ Table 5.2

$$\bar{\lambda}_p = \frac{22{,}5/0{,}6}{28{,}4\times 0{,}894\times\sqrt{4}} = 0{,}738$$ Eq. 5.3

$$\rho = \frac{0{,}772}{\bar{\lambda}_p} - \frac{0{,}079}{\bar{\lambda}_p^2} = \frac{0{,}772}{0{,}738} - \frac{0{,}079}{0{,}738^2} = 0{,}901 \le 1$$

$$b_{eff,u} = \rho\bar{b} = 0{,}901\times 22{,}5 = 20{,}3 \text{ mm}$$ Table 5.3

Effective stiffener properties Section 5.5.3

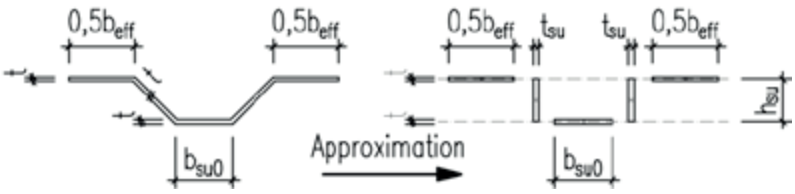

$$t_{su} = \frac{\sqrt{h_{su}^2 + \left(\frac{b_{su}-b_{su0}}{2}\right)^2}}{h_{su}}t = \frac{\sqrt{6^2+\left(\frac{20-8}{2}\right)^2}}{6}\times 0{,}6 = 0{,}849 \text{ mm}$$

$$A_s = (b_{eff,u}+b_{su0})t + 2h_{su}t_{su} = (20{,}3+8)\times 0{,}6 + 2\times 6\times 0{,}849 = 27{,}2 \text{ mm}^2$$ Fig. 5.3

$$e_s = \frac{b_{su0}h_{su}t + 2h_{su}\frac{h_{su}}{2}t_{su}}{A_s} = \frac{8\times 6\times 0{,}6 + 2\times 6\times\frac{6}{2}\times 0{,}849}{27{,}2} = 2{,}18 \text{ mm}$$

$$I_s = 2(15t^2e_s^2) + b_{su0}t(h_{su}-e_s)^2 + 2h_{su}t_{su}\left(\frac{h_{su}}{2}-e_s\right)^2 + 2\left(\frac{15t^4}{12}\right) + \frac{b_{su0}t^3}{12} + 2\frac{t_{su}h_{su}^3}{12}$$ Fig. 5.3

$$I_s = 2\times(15\times 0{,}6^2\times 2{,}18^2) + 8\times 0{,}6\times(6-2{,}18)^2 + 2\times 6\times 0{,}849\times\left(\frac{6}{2}-2{,}18\right)^2 + 2\times\left(\frac{15\times 0{,}6^4}{12}\right) + \frac{8\times 0{,}6^3}{12} + 2\times\frac{0{,}849\times 6^3}{12} = 159{,}25 \text{ mm}^4$$

$$b_s = 2\sqrt{h_{su}^2 + \left(\frac{b_{su}-b_{su0}}{2}\right)^2} + b_{su0} = 2\times\sqrt{6^2+\left(\frac{20-8}{2}\right)^2} + 8 = 25{,}0 \text{ mm}$$

$$l_b = 3{,}07\left[I_s b_p^2\left(\frac{2b_p+3b_s}{t^3}\right)\right]^{1/4}$$ Eq. 5.10

$$l_b = 3{,}07\times\left[159{,}25\times 22{,}5^2\times\left(\frac{2\times 22{,}5+3\times 25}{0{,}6^3}\right)\right]^{1/4} = 251 \text{ mm}$$

$$s_w = \sqrt{\left(\frac{w_0-b_{u0}-b_{l0}}{2}\right)^2 + h_0^2} = \sqrt{\left(\frac{212{,}5-65-57}{2}\right)^2 + 70^2} = 83{,}4 \text{ mm}$$ Fig. 5.5

$$b_d = 2b_p + b_s = 2\times 22{,}5 + 25 = 70 \text{ mm}$$

$$k_{w0} = \sqrt{\frac{s_w + 2b_d}{s_w + 0{,}5b_d}} = \sqrt{\frac{83{,}4 + 2 \times 70}{83{,}4 + 0{,}5 \times 70}} = 1{,}37$$ Eq. 5.11

$$\frac{l_b}{s_w} = \frac{251}{83{,}4} = 3{,}01 \geq 2 \quad \Rightarrow \quad k_w = k_{w0} = 1{,}37$$ Eq. 5.8

$$\sigma_{cr,s} = \frac{4{,}2 k_w E}{A_s} \sqrt{\frac{I_s t^3}{4{b_p}^2 (2b_p + 3b_s)}}$$ Eq. 5.4

$$\sigma_{cr,s} = \frac{4{,}2 \times 1{,}37 \times 200 \times 10^3}{27{,}2} \times \sqrt{\frac{159{,}25 \times 0{,}6^3}{4 \times 22{,}5^2 \times (2 \times 22{,}5 + 3 \times 25)}} = 503{,}4 \text{ N/mm}^2$$

$$\bar{\lambda}_d = \sqrt{\frac{f_y}{\sigma_{cr,s}}} = \sqrt{\frac{280}{503{,}4}} = 0{,}746$$

$$0{,}65 < \bar{\lambda}_d = 0{,}746 < 1{,}38 \quad \Rightarrow$$ Eq. 5.17

$$\chi_d = 1{,}47 - 0{,}723\bar{\lambda}_d = 1{,}47 - 0{,}723 \times 0{,}746 = 0{,}93$$

$$t_{red,u} = \chi_d \, t = 0{,}93 \times 0{,}6 = 0{,}558 \text{ mm}$$

The distance of neutral axis from the compressed flange:

$$t_{sl} = \frac{\sqrt{{h_{sl}}^2 + \left(\frac{b_{sl} - b_{sl0}}{2}\right)^2}}{h_{sl}} t = \frac{\sqrt{6^2 + \left(\frac{20-8}{2}\right)^2}}{6} \times 0{,}6 = 0{,}849 \text{ mm}$$

$$t_w = t/\sin\theta = 0{,}6/\sin(57{,}1°) = 0{,}714 \text{ mm}$$

e_i [mm]	A_i [mm^2]
0	$0{,}5b_{eff,u}\, t = 6{,}1$
0	$0{,}5b_{eff,u}\, \chi_d\, t = 5{,}66$
$0{,}5h_{su} = 3$	$h_{su}\, \chi_d t_{su} = 4{,}74$
$h_{su} = 6$	$0{,}5b_{su0}\, \chi_d\, t = 2{,}23$
$0{,}5h_0 = 35$	$h_0 t_w = 49{,}98$
$h_0 = 70$	$0{,}5(b_{l0} - b_{sl})\, t = 11{,}1$
$h_0 - 0{,}5h_{sl} = 67$	$h_{sl} t_{sl} = 5{,}09$
$h_0 - h_{sl} = 64$	$0{,}5b_{sl0} t = 2{,}4$

$$A_{tot} = \sum A_i = 87{,}3 \text{ mm}^2$$

$$e_c = \frac{\sum A_i e_i}{A_{tot}} = 34{,}9 \text{ mm}$$

Effective cross-section of the compression zone of the web

$$s_{eff,1} = s_{eff,0} = 0{,}76t \sqrt{\frac{E}{\gamma_{M0}\, \sigma_{com,Ed}}} = 0{,}76 \times 0{,}6 \times \sqrt{\frac{200}{1{,}1 \times 280 \times 10^{-3}}} = 11{,}6 \text{ mm}$$ EN 1993-1-3 Clause 5.5.3.4.3(4-5)

$$s_{eff,n} = 1{,}5 s_{eff,0} = 1{,}5 \times 11{,}6 = 17{,}4 \text{ mm}$$

Effective cross-section properties per half corrugation

$h_{\text{eff},1} = s_{\text{eff},1}\sin\theta = 11{,}6 \times \sin(57{,}1°) = 9{,}74$ mm

$h_{\text{eff},n} = s_{\text{eff},n}\sin\theta = 17{,}4 \times \sin(57{,}1°) = 14{,}61$ mm

$e_{\text{eff},i}$ [mm]	$A_{\text{eff},i}$[mm^2]	$I_{\text{eff},i}$[mm^4]
0	$0{,}5b_{\text{eff,u}}t = 6{,}1$	≈ 0
0	$0{,}5b_{\text{eff,u}}\,\chi_d\,t = 5{,}7$	≈ 0
$0{,}5h_{\text{su}} = 3$	$h_{\text{su}}\,\chi_d\,t_{\text{su}} = 4{,}7$	$\chi_d t_{\text{su}} h_{\text{su}}{}^3/12 = 14{,}2$
$h_{\text{su}} = 6$	$0{,}5b_{\text{su0}}\,\chi_d\,t = 2{,}2$	≈ 0
$0{,}5h_{\text{eff},1} = 4{,}9$	$h_{\text{eff},1}t_{\text{w}} = 7{,}0$	$t_{\text{w}}h_{\text{eff},1}{}^3/12 = 55{,}0$
$h_0 - 0{,}5(h_0 - e_{\text{c}} + h_{\text{eff},n}) = 45{,}1$	$(h_0 - e_{\text{c}} + h_{\text{eff},n})\,t_w = 35{,}5$	$t_{\text{w}}\dfrac{(h_0 - e_{\text{c}} + h_{\text{eff},n})^3}{12} = 7308{,}8$
$h_0 = 70$	$0{,}5(b_{l0} - b_{sl})\,t = 11{,}1$	≈ 0
$h_0 - 0{,}5h_{\text{sl}} = 67$	$h_{\text{sl}}t_{\text{sl}} = 5{,}1$	$t_{\text{sl}}h_{\text{sl}}{}^3/12 = 15{,}3$
$h_0 - h_{\text{sl}} = 64$	$0{,}5b_{\text{sl0}}t = 2{,}4$	≈ 0

$A_{\text{tot}} = \sum A_{\text{eff,i}} = 79{,}8$ mm^2

$$e_{\text{c}} = \frac{\sum A_{\text{eff,i}}\,e_{\text{eff,i}}}{A_{\text{tot}}} = 36{,}8 \text{ mm}$$

$I_{\text{tot}} = \sum I_{\text{eff,i}} + \sum A_{\text{eff,i}}(e_{\text{c}} - e_{\text{eff,i}})^2 = 7\,393{,}3 + 51\,667{,}2 = 59\,060{,}5$ mm^2

Optionally the effective section properties may also be redefined iteratively based on the location of the effective centroidal axis. — EN 1993-1-3

Bending strength per unit width (1 m) — Section 5.7.4

$$I = \frac{1000}{0{,}5\text{w}_0}I_{\text{tot}} = \frac{1000}{0{,}5 \times 212{,}5} \times 59\,060{,}5 = 555\,863{,}5 \text{ mm}^4$$

$$W_{\text{u}} = \frac{I}{e_{\text{c}}} = \frac{555\,863{,}5}{36{,}8} = 15\,105{,}0 \text{ mm}^3$$

$$W_{\text{l}} = \frac{I}{h_0 - e_{\text{c}}} = \frac{555\,863{,}5}{70 - 36{,}8} = 16\,742{,}9 \text{ mm}^3$$

Because $W_{\text{u}} < W_{\text{l}} \Rightarrow W_{\text{eff,min}} = W_{\text{u}} = 15\,105{,}0$ mm^3

$$M_{\text{c,Rd}} = \frac{W_{\text{eff,min}}\,f_{\text{y}}}{\gamma_{\text{M0}}} = 15\,105{,}0 \times 280 \times \frac{10^{-6}}{1{,}1} = 3{,}84 \text{ kNm}$$ — Eq. 5.31

Determination of the resistance at the intermediate support — Section 6.4.4

Web crippling strength

$c \geq 40$ mm

$r/t = 2/0{,}6 = 3{,}33 \leq 10$ — EN 1993-1-3

$h_{\text{w}}/t = 70/0{,}6 = 117 \leq 200\sin\theta = 200\sin(57{,}1°) = 168$ — Clause 6.1.7

$45° \leq \theta = 57{,}1° \leq 90°$

$\beta_V = 0 \leq 0{,}2 \Rightarrow l_a = s_s = 100$ mm

$\alpha = 0{,}15$ (category 2)

$$R_{w,Rd} = \alpha t^2 \sqrt{f_y E}\left(1 - 0{,}1\sqrt{\frac{r}{t}}\right)\left(0{,}5 + \sqrt{0{,}02\frac{l_a}{t}}\right)\left[2{,}4 + \left(\frac{\varphi}{90}\right)^2\right]\frac{1}{\gamma_{M1}}\ \frac{1000}{0{,}5 w_0}$$

EN 1993-1-3 Eq. 6.18

$$R_{w,Rd} = 0{,}15 \times 0{,}6^2\sqrt{280 \times 200\,000} \times \left(1 - 0{,}1\sqrt{\frac{2}{0{,}6}}\right)\left(0{,}5 + \sqrt{0{,}02 \times \frac{100}{0{,}6}}\right)$$

$$\times \left[2{,}4 + \left(\frac{57{,}1}{90}\right)^2\right] \times \frac{1}{1{,}1} \times \frac{1000}{0{,}5 \times 212{,}5} \times 10^{-3} = 18{,}4\ \text{kN}$$

Combined bending moment and support reaction

Factored actions per unit width (1 m):

$q = \gamma_G G + \gamma_Q Q = 1{,}35 \times 0{,}07 + 1{,}5 \times 1{,}4 = 2{,}19$ kN/m

$$M_{Ed} = \frac{qL^2}{8} = \frac{2{,}19 \times 2{,}9^2}{8} = 2{,}30\ \text{kNm}$$

$$F_{Ed} = \frac{5}{4}qL = \frac{5}{4} \times 2{,}19 \times 2{,}9 = 7{,}94\ \text{kN}$$

$$\frac{M_{Ed}}{M_{c,Rd}} = \frac{2{,}30}{3{,}84} = 0{,}599 \leq 1{,}0 \qquad \frac{F_{Ed}}{R_{w,Rd}} = \frac{7{,}94}{18{,}4} = 0{,}432 \leq 1{,}0$$

$$\frac{M_{Ed}}{M_{c,Rd}} + \frac{F_{Ed}}{R_{w,Rd}} = 0{,}599 + 0{,}432 = 1{,}031 \leq 1{,}25$$

EN 1993-1-3 Eq. 6.28a - c

Cross-section resistance satisfies the conditions.

Determination of deflections at serviceability limit state (SLS)

Effective cross-section properties

For serviceability verification the effective width of compression elements should be based on the compressive stress in element under the SLS loading.

A conservative approximation is made for the maximum compressive stress in the effective section at SLS based on W_u determined above for ULS.

EN 1993-1-3 Clause 5.5.1

$$M_{y,Ed,ser} = \frac{(G+Q)L^2}{8} = \frac{(0{,}07 + 1{,}4) \times 2{,}9^2}{8} = 1{,}55\ \text{kNm}$$

$$\sigma_{com,Ed,ser} = \frac{M_{y,Ed,ser}}{W_u} = \frac{1{,}55 \times 10^6}{15\,105} = 102{,}6\ \text{N/mm}^2$$

The effective section properties are determined as before at ULS except that f_y is replaced by $\sigma_{com,Ed,ser}$ and the thickness of the flange stiffener is not reduced. The results of the calculation are:

Effective width of the compressed flange:

Location of the centroidal axis when the web is fully effective:	The flange is fully effective.
Effective cross-section of the compression zone of the web:	$e_c = 34{,}48$ mm
Effective cross-section properties per half corrugation:	The web is fully effective.

Effective section properties per unit width (1 m):

A_{tot} = 88,41 mm^2
e_c = 34,48 mm
I_{tot} = 63759,0 mm^4
I = 600084,7 mm^4
W_u = 17403,8 mm^4
W_l = 16894,3 mm^4

Determination of deflection

Secant modulus of elasticity corresponding to maximum value of the bending moment:

$$\sigma_{1,\mathrm{Ed,ser}} = \frac{M_{\mathrm{y,Ed,ser}}}{W_{\mathrm{u}}} = \frac{1{,}55 \times 10^6}{17403{,}8} = 89{,}06 \text{ N/mm}^2$$

$$\sigma_{2,\mathrm{Ed,ser}} = \frac{M_{\mathrm{y,Ed,ser}}}{W_{\mathrm{l}}} = \frac{1{,}55 \times 10^6}{16894{,}3} = 91{,}75 \text{ N/mm}^2$$

$n = 14$ (for ferritic grade 1.4003 stainless steel) — Table 6.4

$$E_{\mathrm{S},1} = \frac{E}{1 + 0{,}002 \dfrac{E}{\sigma_{1,\mathrm{Ed,ser}}} \left(\dfrac{\sigma_{1,\mathrm{Ed,ser}}}{f_{\mathrm{y}}}\right)^n} = \frac{200}{1 + 0{,}002 \times \dfrac{200}{0{,}089} \left(\dfrac{0{,}089}{0{,}28}\right)^{14}} = 200{,}0 \text{ kN/mm}^2$$ — Eq. 6.53

$$E_{\mathrm{S},2} = \frac{E}{1 + 0{,}002 \dfrac{E}{\sigma_{2,\mathrm{Ed,ser}}} \left(\dfrac{\sigma_{2,\mathrm{Ed,ser}}}{f_{\mathrm{y}}}\right)^n} = \frac{200}{1 + 0{,}002 \times \dfrac{200}{0{,}092} \left(\dfrac{0{,}092}{0{,}28}\right)^{14}} = 200{,}0 \text{ kN/mm}^2$$ — Eq. 6.53

$$E_{\mathrm{S}} = \frac{E_{\mathrm{S},1} + E_{\mathrm{S},2}}{2} = \frac{200 + 200}{2} = 200 \text{ kN/mm}^2$$ — Eq. 6.52

There is no effect of material non-linearity on deflection for the given steel grade and stress level.

Check of deflection:

For cross-section stiffness properties the influence of rounded corners should be taken into account. The influence is considered by the following approximation:

$$\delta = 0{,}43 \frac{\sum_{\mathrm{j}=1}^{n} r_{\mathrm{j}} \dfrac{\varphi_j}{90^o}}{\sum_{\mathrm{i}=1}^{m} b_{\mathrm{p,i}}} = 0{,}43 \frac{2 \times \dfrac{294{,}2^o}{90^o}}{149{,}3} = 0{,}019$$ — Eq. 5.22

$$I_{\mathrm{y,r}} = I\,(1 - 2\delta) = 600084{,}7\,(1 - 2 \times 0{,}019) = 577281{,}5 \text{ mm}^4$$ — Eq. 5.20

For the location of maximum deflection:

$$x = \frac{1 + \sqrt{33}}{16} \times L = \frac{1 + \sqrt{33}}{16} \times 2{,}9 = 1{,}22 \text{ m}$$

$$\delta = \frac{(G + Q)L^4}{48 E_{\mathrm{S}}\, I_{\mathrm{y,r}}} \left(\frac{x}{L} - 3\frac{x^3}{L^3} + 2\frac{x^4}{L^4}\right)$$

$$\delta = \frac{(0{,}07 + 1{,}4) \times 10^3 \times 2{,}9^4}{48 \times 200 \times 10^6 \times 577281{,}5 \times 10^{-12}} \times \left(\frac{1{,}48}{2{,}9} - 3 \times \frac{1{,}48^3}{2{,}9^3} + 2 \times \frac{1{,}48^4}{2{,}9^4}\right)$$

$$\delta = 4{,}64 \text{ mm}$$

The permissible deflection is $L/200$ = 2900/200 = 14,5 mm > 4,64 mm, hence the calculated deflection is acceptable.

DESIGN EXAMPLE 4 – FATIGUE STRENGTH OF A WELDED HOLLOW SECTION JOINT

This example considers the fatigue strength of the chord of a welded hollow section joint. Fatigue should be considered in the design of stainless steel structures which are subjected to repeated fluctuations of stresses, e.g. in oil platforms, masts, chimneys, bridges, cranes and transport equipment. — Section 9

EN 1993-1-9 is applicable for estimating the fatigue strength of austenitic and duplex stainless steel structures.

The example shows the following design tasks for fatigue assessment:

- determination of the fatigue strength curve
- determination of secondary bending moments in the joint
- determination of the partial safety factor for fatigue strength
- fatigue assessment for variable amplitude loading.

The chords of the joint are RHS 50×50×4 and braces are RHS 30×30×2. The material is austenitic grade 1.4301 stainless steel with 0,2% proof stress of 210 N/mm^2. — Table 2.2

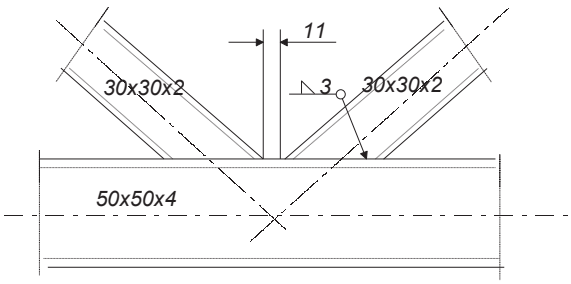

Actions

The fatigue stress spectra for the chord during the required design life is:

Nominal stress range:	Number of cycles:
$\Delta\sigma_1 = 100$ N/mm^2	$n_1 = 10\times10^3$
$\Delta\sigma_2 = 70$ N/mm^2	$n_2 = 100\times10^3$
$\Delta\sigma_3 = 40$ N/mm^2	$n_3 = 1000\times10^3$

Structural analysis

The detail category of the joint depends on the dimensions of chord and braces. In this example $b_0 = 50$ mm, $b_i = 30$ mm, $t_0 = 4$ mm and $t_i = 2$ mm. — All subsequent references to EN 1993-1-9

Because $t_0/t_i = 2$, the detail category is 71.

Because $0{,}5(b_0 - b_i) = 10$ mm, $g = 11$ mm, $1{,}1(b_0 - b_i) = 22$ mm and $2t_0 = 8$ mm, the joint also satisfies the conditions $0{,}5(b_0 - b_i) \le g \le 1{,}1(b_0 - b_i)$ and $g \ge 2t_0$. — Table 8.7

Effect of secondary bending moments in the joint

The effects of secondary bending moments are taken into account by multiplying the stress ranges due to axial member forces by coefficient $k_1 = 1{,}5$. — Clause 4 (2), Table 4.2

Partial factors

When it is assumed that the structure is damage tolerant and the consequence of failure is low, the recommended value for the partial factor for fatigue strength is $\gamma_{Mf} = 1{,}0$.
The partial safety factor for loading is $\gamma_{Ff} = 1{,}0$. — Clause 3 (7), Table 3.1

Fatigue assessment

Reference stress range corresponding to 2×10^6 stress fluctuations for detail category 71 is $\Delta\sigma_c = 71$ N/mm^2.
The fatigue strength curve for lattice girders has a constant slope $m = 5$. — Figure 7.1

The number of stress fluctuations corresponding to the nominal stress range $\Delta\sigma_i$ is:

$$N_i = 2\times10^6\left[\frac{\Delta\sigma_c}{\gamma_{Mf}\gamma_{Ff}\left(k_1\Delta\sigma_i\right)}\right]^m$$

$\Delta\sigma_1 = 100$ N/mm^2	$N_1 = 47{,}5\times10^3$
$\Delta\sigma_2 = 70$ N/mm^2	$N_2 = 283\times10^3$
$\Delta\sigma_3 = 40$ N/mm^2	$N_3 = 4640\times10^3$

Palmgren-Miner rule of cumulative damage

Partial damage because of n_i cycles of stress range $\Delta\sigma_i$: $D_{d,i} = n_{Ei} / N_{Ri}$

Therefore, for

$\Delta\sigma_1 = 100$ N/mm^2	$D_{d,1} = 0{,}21$	A.5 (1)
$\Delta\sigma_2 = 70$ N/mm^2	$D_{d,2} = 0{,}35$	
$\Delta\sigma_3 = 40$ N/mm^2	$D_{d,3} = 0{,}22$	

The cumulative damage during the design life is: — Eq. A.1

$$D_d = \sum_i^n \frac{n_{Ei}}{N_{Ri}} = \sum D_{d,i} = 0{,}78 \le 1{,}0$$

Because the cumulative damage is less than unity, the calculated design life of the chord exceeds the required design life. — Clause 8 (4)

The procedure described above shall also be repeated for the brace.

Promotion of new Eurocode rules for structural stainless steels (PUREST)	Title	Design Example 5 – Welded joint		
CALCULATION SHEET	Client	Research Fund for Coal and Steel	Made by IR	Date 08/02
			Revised by MEB	Date 04/06
			Revised by UDE	Date 01/17

DESIGN EXAMPLE 5 – WELDED JOINT

The joint configuration and its loading are shown in the figure below. Noting that there are two identical plane fillet weld joints of constant throat thickness sharing the applied loading, the required throat thickness for the welds shall be determined. Right angle (equal leg) welds will be used throughout.

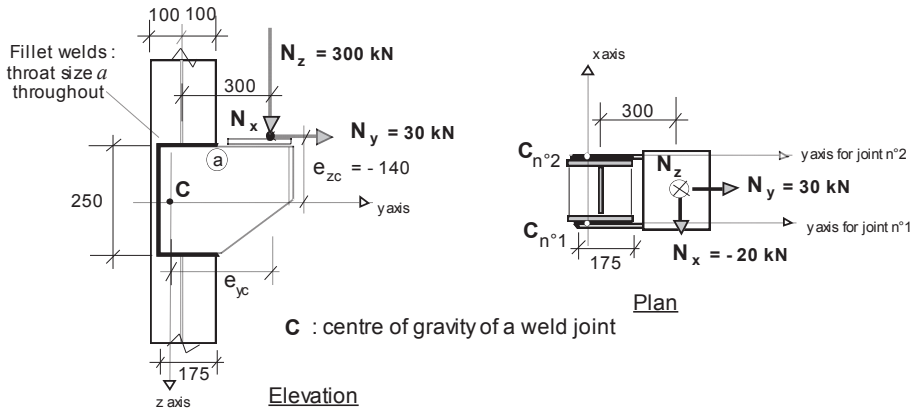

Material properties

Use austenitic grade 1.4401: — Table 2.2

f_y = 220 N/mm^2, f_u = 530 N/mm^2, E = 200000 N/mm^2 and G = 76900 N/mm^2. — Section 2.3.1

It is assumed that the yield and ultimate tensile strength of the weld exceed those of the parent metal. — Section 7.4.1

Partial factor

The partial factor on weld resistance is γ_{M2} = 1,25. — Table 4.1

The need to include a reduction factor on the weld resistance to account for its length will also be examined.

Analysis of welded joints

An elastic analysis approach is used here for designing the right-angle equal-leg fillet weld for the load case indicated above which leads to a conservative estimate of the joint resistance. — EN 1993-1-8 clause 2.5

The coordinates (x_c, y_c, z_c) of a point on the welded joint are taken with reference to a right hand axis system with an origin at the centre of gravity of the welded joint (In the present case the joint is taken to be in the y-z plane so that x_c = 0 throughout.).

The main purpose of the elastic analysis is to determine the design forces in the weld at the most severely loaded point or points of the welded joint, often referred to as the "critical" points. For the welded joint being examined the critical point can be taken as being the point furthest from the centre of gravity of the joint.

The vectors of the applied force, its eccentricity and the resulting moments acting on a welded joint of general form and centre of gravity C can be expressed as follows:

Applied force

$$\overline{N_{\mathrm{w,Ed}}} = \left[N_{\mathrm{x,Ed}},\quad N_{\mathrm{y,Ed}},\quad N_{\mathrm{z,Ed}} \right]$$

Eccentricity of the applied force

$$\overline{e_{\mathrm{N}}} = \left[e_{\mathrm{xc}},\quad e_{\mathrm{yc}},\quad e_{\mathrm{zc}} \right]$$

(these are the coordinates of the point of application of the force)

Applied moments

$$M_{\mathrm{xc,Ed}} = e_{\mathrm{yc}} N_{\mathrm{z,Ed}} - e_{\mathrm{zc}} N_{\mathrm{y,Ed}}$$

$$M_{\mathrm{yc,Ed}} = e_{\mathrm{zc}} N_{\mathrm{x,Ed}} - e_{\mathrm{xc}} N_{\mathrm{z,Ed}}$$

$$M_{\mathrm{zc,Ed}} = e_{\mathrm{xc}} N_{\mathrm{y,Ed}} - e_{\mathrm{yc}} N_{\mathrm{x,Ed}}$$

A linear elastic analysis of the joint for a general load case leads to the following force components per unit length of weld at a point with coordinates (x_{c}, y_{c}, z_{c}), where the throat thickness is denoted by a:

$$F_{\mathrm{wx,Ed}} = a \left[\frac{N_{\mathrm{x,Ed}}}{A_{\mathrm{w}}} + \frac{z_{\mathrm{c}} M_{\mathrm{yc,Ed}}}{I_{\mathrm{yc}}} - \frac{y_{\mathrm{c}} M_{\mathrm{zc,Ed}}}{I_{\mathrm{zc}}} \right]$$

$$F_{\mathrm{wy,Ed}} = a \left[\frac{N_{\mathrm{y,Ed}}}{A_{\mathrm{w}}} + \frac{x_{\mathrm{c}} M_{\mathrm{zc,Ed}}}{I_{\mathrm{zc}}} - \frac{z_{\mathrm{c}} M_{\mathrm{xc,Ed}}}{I_{\mathrm{xc}}} \right]$$

$$F_{\mathrm{wz,Ed}} = a \left[\frac{N_{\mathrm{z,Ed}}}{A_{\mathrm{w}}} + \frac{y_{\mathrm{c}} M_{\mathrm{xc,Ed}}}{I_{\mathrm{xc}}} - \frac{x_{\mathrm{c}} M_{\mathrm{yc,Ed}}}{I_{\mathrm{yc}}} \right]$$

In the above expressions, the resisting sectional throat area and the second moment of area about the principal axes of the welded joint are:

$$A_{\mathrm{w}} = \int a\,dl = \sum a_{\mathrm{i}} l_{\mathrm{i}}$$

for a weld of straight segments of length l_i and throat thickness a_{i},

$$I_{\mathrm{xc}} = \int a \left(y_{\mathrm{c}}^2 + z_{\mathrm{c}}^2 \right) dl$$

$$I_{\mathrm{yc}} = \int a \left(x_{\mathrm{c}}^2 + z_{\mathrm{c}}^2 \right) dl$$

$$I_{\mathrm{zc}} = \int a \left(x_{\mathrm{c}}^2 + y_{\mathrm{c}}^2 \right) dl$$

Assuming that all welds have equal thickness a:

$$\frac{A_{\mathrm{w}}}{a} = \int dl = \sum l_{\mathrm{i}}$$

and since $x_{\mathrm{c}} = 0$:

$$\frac{I_{\mathrm{zc}}}{a} = \int y_{\mathrm{c}}^2 dl$$

$$\frac{I_{\mathrm{yc}}}{a} = \int z_{\mathrm{c}}^2 dl$$

$$\frac{I_{\mathrm{xc}}}{a} = \int y_{\mathrm{c}}^2 + z_{\mathrm{c}}^2 dl = \frac{I_{\mathrm{yc}}}{a} + \frac{I_{\mathrm{zc}}}{a}$$

Design of fillet welds

Two different design methods are allowed for designing fillet welds and thus to determine the required weld throat thickness at the critical point: Section 7.4.2

The first procedure is based on the simplified and more conservative design shear strength for a fillet weld. The design shear force per unit length of the weld at any point of the joint is defined as the vector sum of the design forces per unit length due to all forces and moments transmitted by the welded joint. This design shear force per unit length should not exceed the design resistance per unit length which is taken as the design shear strength multiplied by the throat thickness. This approach ignores the throat plane orientation to the direction of resultant weld force per unit length.

The second procedure is based on comparing the basic design strength of the weaker part joined to the applied design weld stress in the weld throat determined by a von Mises type of formula. This approach is the most precise as it allows for the throat plane orientation to the direction of resultant weld force per unit length.

1. Simplified method

The design resistance check of the fillet weld is as follows:

$$F_{\mathrm{w.Ed}} = \sqrt{F_{\mathrm{wx,Ed}}^2 + F_{\mathrm{wy,Ed}}^2 + F_{\mathrm{wz,Ed}}^2} \le F_{\mathrm{w,Rd}} = a f_{\mathrm{vw,d}} = a\left(\frac{f_{\mathrm{u}}/\sqrt{3}}{\beta_{\mathrm{w}}\gamma_{\mathrm{M2}}}\right)$$

EN 1993-1-8 clause 4.5.3.3

where:

$f_{\mathrm{vw,d}}$ is the design shear strength of the weld,

$F_{\mathrm{w,Rd}}$ is the design (shear) resistance per unit length of weld of throat thickness a.

For stainless steel, β_{w} is taken as 1,0. Section 7.4.2

When the design procedure requires that a suitable throat thickness be obtained, the design expression becomes:

$$a \ge \frac{F_{\mathrm{w,Ed}}}{f_{\mathrm{vw,d}}}$$

2. Directional method

In the directional method, the forces transmitted by a weld are resolved into normal stresses and shear stresses with respect to the throat section (see Fig. 4.5 in EN 1993-1-8):

- A normal stress $\sigma_{\perp}$ perpendicular to the throat section,
- A shear stress $\tau_{||}$ acting in the throat section parallel to the axis of the weld,
- A shear stress $\tau_{\perp}$ acting in the throat section transverse to the axis of the weld.

The normal stress $\sigma_{||}$ parallel to the weld axis does not need to be considered.

For the combination of stresses $\sigma_{\perp}$, $\tau_{||}$, and $\tau_{\perp}$, the design requirement is: Eqs. 7.14 and 7.15

$$\sqrt{\sigma_{\perp}^2 + 3(\tau_{\perp}^2 + \tau_{||}^2)} \le \frac{f_{\mathrm{u}}}{\beta_{\mathrm{w}}\gamma_{\mathrm{M2}}} \quad \text{and} \quad \sigma_{\perp} \le \frac{0{,}9 f_{\mathrm{u}}}{\gamma_{\mathrm{M2}}}$$

For the present case of a plane fillet weld joint with right angle (equal leg) welds this latter check is not critical. However, it may be critical for partial penetration welds in bevelled joints.

Instead of having to calculate the stress components in the weld throat the following design check expression may be used for *y-z* plane joints with right angle (equal leg) welds:

$$2F_{\mathrm{w,x}}^2 + 2F_{\mathrm{w,y}}^2 + 2F_{\mathrm{w,z}}^2 + F_{\mathrm{w,y}}^2 \operatorname{Cos}^2\theta + F_{\mathrm{w,z}}^2 \operatorname{Sin}^2\theta - 2F_{\mathrm{w,x}}F_{\mathrm{w,y}} \operatorname{Sin}\theta + 2F_{\mathrm{w,x}}F_{\mathrm{w,z}} \operatorname{Cos}\theta$$

$$+2F_{\mathrm{w,y}}F_{\mathrm{w,z}} \operatorname{Sin}\theta \operatorname{Cos}\theta \le \left(a\frac{f_{\mathrm{u}}}{\beta_{\mathrm{w}}\gamma_{\mathrm{M2}}}\right)^2$$

Note: The subscripts have been shortened: $F_{\mathrm{w,x}}$ for $F_{\mathrm{wx,Ed}}$ etc.

In the above expression, the angle θ is that between the y-axis and the axis of the weld as shown below:

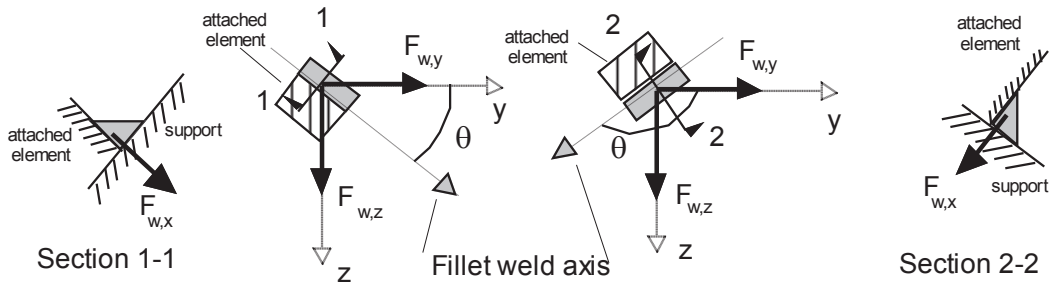

The force components at the critical point of the weld are determined in the Appendix to this design example.

1. Simplified method

The design shear strength for the simplified design approach is:

$$f_{vw,d} = \frac{f_u}{\beta_w \gamma_{M2} \sqrt{3}} = \frac{530}{1,0 \times 1,25 \times \sqrt{3}} \approx 245 \text{ N/mm}^2$$

EN 1993-1-8: Eq. 4.4

The value of the resultant induced force per unit length in a weld throat of 1 mm is :

$$F_{w,Ed} = \sqrt{F_{wx,Ed}^2 + F_{wy,Ed}^2 + F_{wz,Ed}^2} = \sqrt{243^2 + 747^2 + 966^2} = 1245 \text{ N/mm}$$

The required throat thickness is therefore:

$$a \geq \frac{F_{w,Ed}}{f_{vw,d}} = \frac{1245}{245} \approx 5,0 \text{ mm}$$

2. Directional method

At the point (a), where the angle θ is 0°, the design check expression becomes:

$$2F_{wx,Ed}^2 + 3F_{wy,Ed}^2 + 2F_{wz,Ed}^2 + 2F_{wx,Ed}F_{wz,Ed} \leq \left(a \frac{f_u}{\gamma_{M2}} \right)^2$$

The required throat thickness is therefore:

$$a \geq \frac{\sqrt{2 \times (-243)^2 + 3 \times (747)^2 + 2 \times (966)^2 + 2 \times (-243) \times (966)}}{530 / 1,25} = 4,8 \text{ mm}$$

Adopt a 5 mm throat thickness and assume that the weld is full size over its entire length.

<u>Note:</u> *A reduction factor is required for splice joints when the effective length of fillet weld is greater than* 150*a. The reduction factor would seem to be less relevant for the present type of joint. Nevertheless, by considering safely the full length of the welded joint and a throat thickness of* 5 *mm one obtains:*

$$\beta_{LW.1} = 1,2 - \frac{0,2L_j}{150a} = 1,2 - \frac{0,2 \times 600}{150 \times 5} = 1,04 > 1,0$$

EN 1993-1-8 Eq. 4.9

Take $\beta_{LW.1}$ = 1,0.

It is concluded that the use of a reduction factor on the design strength of the weld is not required.

Appendix – Calculation of the force components at the critical point of the weld

Geometric properties of the welded joint

There are two similar joints, one on each side of the column, resisting the applied loads. Only one of the joints needs to be examined.

Throat area and the positions of the centre of gravity and the critical point

The throat area (resisting section) of each of the joints made up of straight segments of length L_i and constant throat thickness a is for each 1 mm of throat thickness:

$$\frac{A_{\mathrm{w}}}{a}=\frac{a\int ds}{a}=\frac{\sum A_{\mathrm{w},i}}{a}=\frac{\sum aL_{\mathrm{w},i}}{a}=\sum L_i=2\times 175+250=600\ \mathrm{mm^2/m}$$

Distance of the centre of gravity from the vertical side (parallel to the z axis) of the joint with constant throat thickness a:

$$\bar{y}=\frac{\sum \bar{y}_i\dfrac{A_{\mathrm{w},i}}{a}}{\sum \dfrac{A_{\mathrm{w},i}}{a}}=\frac{\sum \bar{y}_i L_i}{\sum L_i}=\frac{2\times(87{,}5\times 175)+0\times 250}{600}\approx 51\ \mathrm{mm}$$

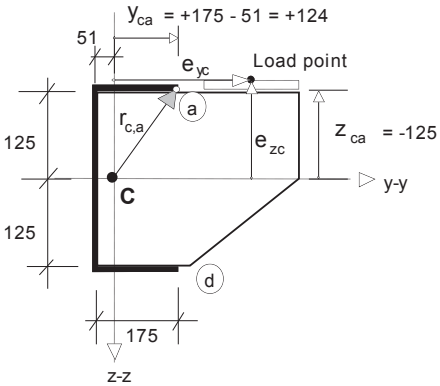

The coordinates of the critical point of the joint (a) relative to the principal axes through the centre of gravity C are:

$$y_{\mathrm{ca}}=+(175-51)=+124\mathrm{mm}\qquad z_{\mathrm{ca}}=-125\mathrm{mm}$$

Note: The point (d) might also be chosen as a potential critical point, for which:

$$y_{\mathrm{ca}}=+(175-51)=+124\mathrm{mm}\qquad z_{\mathrm{ca}}=+125\mathrm{mm}$$

However, for the load case considered it is evident that the point (a) is the most critical.

Second moment of area of the joint resisting section

For each of the joints, for each 1 mm of throat thickness:

$$\frac{I_{\mathrm{yc}}}{a}=\int z_{\mathrm{c}}^2 ds=2\times 175\times 125^2+\frac{250^3}{12}=6{,}77\times 10^6\ \mathrm{mm^4/mm}$$

$$\frac{I_{\mathrm{zc}}}{a}=\int y_{\mathrm{c}}^2 ds=250\times 51^2+2\times\frac{175^3}{12}+2\times 175\times(87{,}5-51)^2=2{,}01\times 10^6\ \mathrm{mm^4/mm}$$

For the "torsion" moment the relevant inertia per joint is:

$$I_{\mathrm{xc}}=a\int r_{\mathrm{c}}^2 ds=a\int y_{\mathrm{c}}^2 ds+a\int z_{\mathrm{c}}^2 ds=I_{\mathrm{zc}}+I_{\mathrm{yc}}$$

so that:

$$\frac{I_{xc}}{a} = (6,77 + 2,01) \times 10^6 \;=\; 8,78 \times 10^6 \,\text{mm}^4/\text{mm}$$

Applied forces and moments

It is assumed that the applied loads and moments are shared equally by both joints.
The applied axial and shear force components per joint are:

$$N_{x,Ed} = -\frac{20}{2} = -10 \text{ kN} \qquad N_{y,Ed} = +\frac{30}{2} = +15 \text{ kN} \qquad N_{z,Ed} = +\frac{300}{2} = +150 \text{ kN}$$

The applied moments are calculated by using the applied force components and their eccentricities. The eccentricities, i.e. the coordinates of the effective load point, are:

$e_{xc} = 0$ as the effective load point is taken to be in the *y-z* plane of the joint

$e_{yc} = 300 - 100 + 175 - 51 = +\ 324$ mm

$e_{zc} = -\ 140$ mm

As a result the applied moments per joint are:

$$M_{xc,Ed} = e_{yc} N_{z,Ed} - e_{zc} N_{y,Ed} = (+324) \times (+150) - (-140) \times (+15) = +50,7 \text{ kNm}$$

$$M_{yc,Ed} = e_{zc} N_{x,Ed} - e_{xc} N_{z,Ed} = (-140) \times (-10) - (0) \times (+150) = +1,4 \text{ kNm}$$

$$M_{zc,Ed} = e_{xc} N_{y,Ed} - e_{yc} N_{x,Ed} = (0) \times (+15) - (+324) \times (-10) = +3,24 \text{ kNm}$$

Force components at the critical point of the weld

For the *y-z* plane joint the force components per unit length of the weld, at the point (a) are as follows:

$$F_{wx,Ed} = \frac{N_{x,Ed}}{A_w/a} + \frac{z_{ca} M_{yc,Ed}}{I_{yc}/a} - \frac{y_{ca} M_{zc,Ed}}{I_{zc}/a}$$

$$F_{wy,Ed} = \frac{N_{y,Ed}}{A_w/a} - \frac{z_{ca} M_{xc,Ed}}{I_{xc}/a}$$

$$F_{wz,Ed} = \frac{N_{zc,Ed}}{A_w/a/} \frac{y_{ca} M_{xc,Ed}}{I_{xc}/a}$$

The contributions to the weld force components (at all points of the welded joint) from the applied force components are:

$$F_{w,x}^{N_x} = \frac{N_{x,Ed}}{A_w/a} = \frac{-10}{600} = -17 \text{ N/mm}$$

$$F_{w,y}^{N_y} = \frac{N_{y,Ed}}{A_w/a} = \frac{+15}{600} = +25 \text{ N/mm}$$

$$F_{w,z}^{N_z} = \frac{N_{z,Ed}}{A_w/a} = \frac{+150}{600} = +\ 250 \text{ N/mm}$$

The various contributions to the weld force components per unit length of weld at the point (a) from the applied moment components are :

$$F_{w,y}^{M_{xc}} = -M_{xc,Ed}\frac{z_{c,a}}{I_{xc}/a} = -50,7\times10^6 \times \frac{(-125)}{8,78\times10^6} = +722 \text{ N/mm}$$

$$F_{w,z}^{M_{xc}} = +M_{xc,Ed}\frac{y_{c,a}}{I_{xc}/a} = +50,7\times10^6 \times \frac{(+124)}{8,78\times10^6} = +716 \text{ N/mm}$$

$$F_{w,x}^{M_{yc}} = +M_{yc,Ed}\frac{z_{c,a}}{I_{yc}/a} = +1,41\times10^6 \times \frac{(-125)}{6,77\times10^6} = -26 \text{ N/mm}$$

$$F_{w,x}^{M_{zc}} = -M_{zc,Ed}\frac{y_{c,a}}{I_{zc}/a} = -3,24\times10^6 \times \frac{(+124)}{2,01\times10^6} = -200 \text{ N/mm}$$

Combining the contributions from the forces and the moments at the point (a) one obtains:

$$F_{wx,Ed} = F_{w,x}^{N_x} + F_{w,x}^{M_{yc}} + F_{w,x}^{M_{zc}} = -17-26-200 = -243 \text{ N/mm}$$

$$F_{wy,Ed} = F_{w,y}^{N_y} + F_{w,y}^{M_{xc}} = +25+722 = +747 \text{ N/mm}$$

$$F_{wz,Ed} = F_{w,z}^{N_z} + F_{w,z}^{M_{xc}} = +250+716 = +966 \text{ N/mm}$$

These resultant design force components per unit length apply to a welded joint with a weld throat thickness of 1 mm throughout its entire effective length.

Promotion of new Eurocode rules for structural stainless steels (PUREST)	Title	Design Example 6 – Bolted joint		
CALCULATION SHEET	Client	Research Fund for Coal and Steel	Made by IR	Date 10/02
			Revised by MEB	Date 04/06
			Revised by UDE	Date 01/17

DESIGN EXAMPLE 6 – BOLTED JOINT

An angle (100×100×10) loaded in tension is to be connected to a gusset plate of 10 mm thickness. Stainless steel austenitic grade 1.4401 is used for the angle and the gusset plate. Eight bolts made of austenitic stainless steel, property class 50 with a diameter of 16 mm are used in a staggered line to connect one leg of the angle to the gusset plate. It is required to determine the design resistance of the joint.

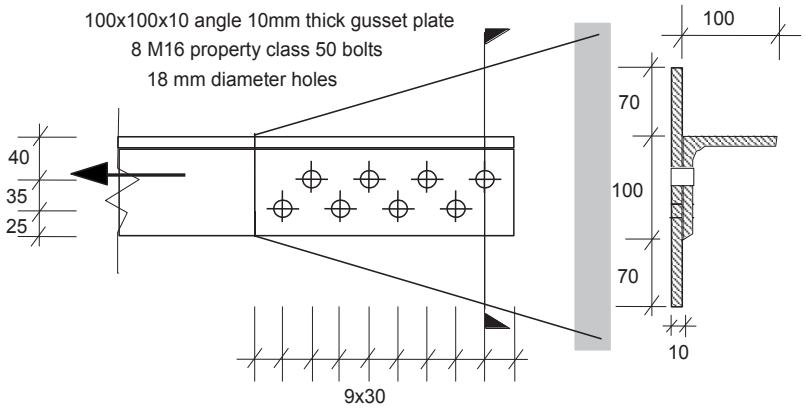

The connection is a Category A: Bearing Type connection. — EN 1993-1-8 Clause 3.4.1

The design ultimate shear load should not exceed the design shear resistance nor the design bearing resistance.

Material properties

Both the angle and the plate are made of stainless steel austenitic grade 1.4401: — Table 2.2

f_y = 220 N/mm^2 and f_u = 530 N/mm^2 — Section 2.3.1

The bolt material is of property class 50:

f_{yb} = 210 N/mm^2 and f_{ub} = 500 N/mm^2. — Table 2.6

Partial factors

Partial factor on gross section resistance: $\gamma_{M0} = \gamma_{M1} = 1{,}1$ — Table 4.1

Partial factor on net section resistance: $\gamma_{M2} = 1{,}25$

Partial factor on bolt resistance in shear and in bearing: $\gamma_{M2} = 1{,}25$

Position and size of holes — Section 7.2.3

For M16 bolts a hole diameter d_0 = 18 mm is required.

End distances e_1 = 30 mm and edge distance e_2 = 25 mm.

e_1 and e_2 < 4t + 40 = 4 × 10 + 40 = 80 mm and
> 1,2d_0 = 1,2 × 18 = 21,6 mm

For the staggered bolt rows:

- spacing p_1 = 60 mm > 2,2d_0 = 39,6 mm
- distance between two bolts in staggered row:

$$\sqrt{30^2+35^2} = 46{,}1 \text{ mm} > 2{,}4\text{d}_0 = 43{,}2 \text{ mm}$$

- therefore, spacing for staggered rows p_2 = 35 mm > 1,2d_0 = 21,6 mm

Note: For compression loading e_2 and p_1 should be checked so that they satisfy local buckling requirements for an outstand element and an internal element respectively. Checks on both the angle and gusset plate are required.

Design resistance of the angle gross cross-section in tension — Section 7.2.3

Gross cross-sectional area of the angle A_g = 1915 mm²

Design plastic resistance:

$$N_{\text{pl,Rd}} = \frac{A_g f_y}{\gamma_{M0}} = \frac{1915 \times 220}{1{,}1 \times 10^3} = 383 \text{ kN}$$ — Eq. 7.6

Design resistance of the angle net cross-section in tension — Section 5.6.4

For staggered holes the net cross-sectional area should be taken as the lesser of the gross area minus the deduction for non-staggered holes or:

$$A_g - t\left(nd_0 - \sum\left[\frac{s^2}{4p}\right]\right)$$

Deductions for non-staggered holes:

$$A_g - td_0 = 1915 - 10 \times 18 = 1735 \text{ mm}^2$$

Net cross-sectional area through two staggered holes:

n = 2, s = 30 mm and p = 35 mm

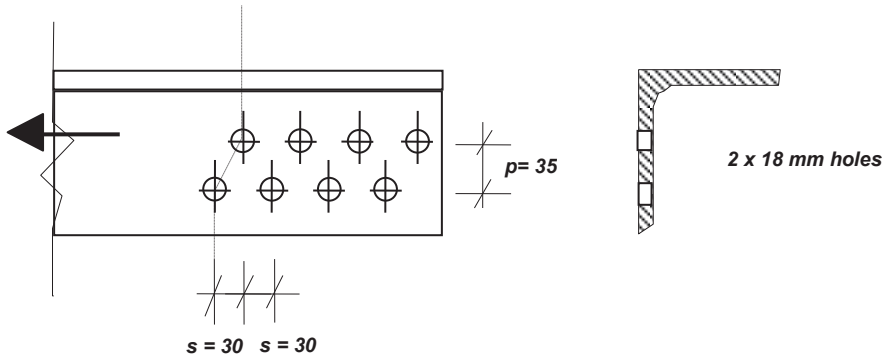

$$A_{\text{net}} = A_g - t\left(nd_0 - \sum\frac{s^2}{4p}\right) = 1915 - 10 \times \left((2 \times 18) - \frac{30^2}{4 \times 35}\right)$$
$$= 1915 - 10 \times (36 - 6{,}4) = 1619 \text{ mm}^2$$

Therefore, A_{net} = 1619 mm².

Conservatively the reduction factor for an angle connected by one leg with a single row of bolts may be used. By interpolation for more than 3 bolts in one row: β_3 = 0,57. — Table 7.1

Design ultimate resistance of the net cross-section of the angle: — Section 7.2.3

$$N_{u,Rd} = \frac{\beta_3 A_{net} f_u}{\gamma_{M2}} = \frac{0,57 \times 1619 \times 530}{1,25 \times 10^3} = 391 \text{ kN}$$ — Eq. 7.10

Design resistance of the angle in block tearing

The expressions for block tearing are taken from EN 1993-1-8 (instead of EN 1993-1-1) since EN 1993-1-8 explicitly covers angles.

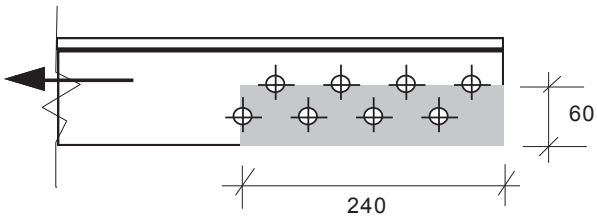

Design resistance in block tearing considering rows as staggered:

$$V_{eff,2,Rd} = \frac{0,5 f_u A_{nt}}{\gamma_{M2}} + \frac{f_y A_{nv}}{\sqrt{3}\gamma_{M0}} = \frac{0,5 \times 530 \times (60-18) \times 10}{1,25 \times 10^3} + \frac{220 \times (240 - 4 \times 18) \times 10}{\sqrt{3} \times 1,1 \times 10^3}$$
$$= 89 + 194 = 283 \text{ kN}$$ — EN 1993-1-8 Clause 3.10.2(3) Eq. 3.10

Design resistance in block tearing considering rows as if non staggered:

$$V_{eff,2,Rd} = \frac{0,5 f_u A_{nt}}{\gamma_{M2}} + \frac{f_y A_{nv}}{\sqrt{3}\gamma_{M0}} = \frac{0,5 \times 530 \times (60-18-9) \times 10}{1,25 \times 10^3} + \frac{220 \times (240 - 3 \times 18 - 9) \times 10}{\sqrt{3} \times 1,1 \times 10^3}$$
$$= 70 + 204 = 274 \text{ kN}$$ — EN 1993-1-8 Clause 3.10.2(3) Eq. 3.10

Design resistance of the gross cross-section of the gusset plate

Gross cross-sectional area towards the end of the angle: — Section 5.7.2

$A_g = 10 \times (100 + 70 + 70) = 2400 \text{ mm}^2$

Design plastic resistance

$$N_{pl,Rd} = \frac{A_g f_y}{\gamma_{M0}} = \frac{2400 \times 220}{1,1 \times 10^3} = 480 \text{ kN}$$ — Eq. 5.23

Design resistance of the net cross-section of the gusset plate

Net cross-sectional area towards the end of the angle (where the applied load is greatest) through one hole non symmetrically placed on an element of width: — Section 5.7.2

$b = 100 + 70 + 70 = 240 \text{ mm}$

$A_{net} = A_g - d_0 t = 2400 - 18 \times 10 = 2220 \text{ mm}^2$

Net cross-sectional area towards the end of the angle through two staggered holes with $s = 30$ mm and $p = 35$ mm:

$$A_{net} = A_g - 2d_0 t + \frac{s^2 t}{4p} = 2400 - 2 \times 18 \times 10 + \frac{30^2 \times 10}{4 \times 35}$$
$$= 2400 - 360 + 64 = 2104 \text{ mm}^2$$

Therefore, $A_{net} = 2104$ mm².

Design ultimate resistance of the net cross-section of the gusset plate near the end of the angle:

$$N_{u,Rd} = \frac{kA_{net}f_u}{\gamma_{M2}}$$ Eq. 5.24

Take factor k = 1,0 for this example (k = 1,0 for sections with smooth holes)

$$N_{u,Rd} = \frac{1,0 \times 2104 \times 530}{1,25 \times 10^3} = 892 \text{ kN}$$

It is advisable to check the resistance of net cross-sections at intermediate cross-sections along the gusset plate.

<u>Cross-section at the 1st bolt hole near the gusset plate edge</u>

(Where b = 100 + 30 / 240 × 140 = 117,5 mm)

$A_{net} = A_g - d_0t$ = 117,5 × 10 – 18 × 10 = 995 mm^2

This cross-section must be capable of transmitting the load from one bolt.

Design ultimate resistance at the section:

$$N_{u,Rd} = \frac{kA_{net}f_u}{\gamma_{M2}} = \frac{1,0 \times 995 \times 530}{1,25 \times 10^3} = 421 \text{ kN}$$ Eq. 5.24

It is obvious that there is no need to check any other cross-sections of the gusset plate as the load applied cannot exceed the design resistance of the angle itself, which has been shown to be smaller than the above value.

Design resistance of the gusset plate in block tearing

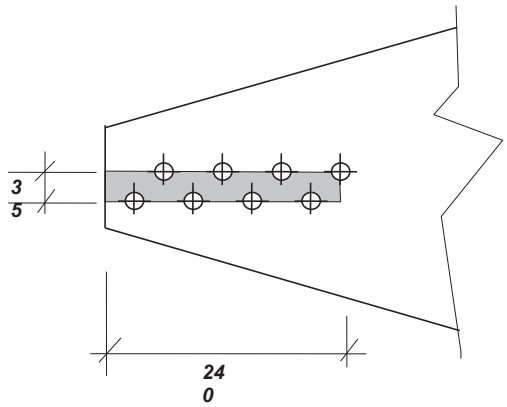

Design resistance to block tearing considering rows as staggered: EN 1993-1-8 Clause 3.10.2(2) Eq. 3.9

$$V_{eff,1,Rd} = \frac{f_u A_{nt}}{\gamma_{M2}} + \frac{f_y A_{nv}}{\sqrt{3}\gamma_{M0}}$$

$$= \frac{530 \times (35-9) \times 10}{1,25 \times 10^3} + \frac{220 \times (240 - 4 \times 18 + 240 - 3 \times 18 - 9) \times 10}{\sqrt{3} \times 1,1 \times 10^3}$$

$$= 110,2 + 398,4 = 508 \text{ kN}$$

Design resistance to block tearing considering rows as if non staggered: EN 1993-1-8 Clause 3.10.2(2) Eq. 3.9

$$V_{eff,1,Rd} = \frac{f_u A_{nt}}{\gamma_{M2}} + \frac{f_y A_{nv}}{\sqrt{3}\gamma_{M0}}$$

$$= \frac{530 \times (35 - 2 \times 9) \times 10}{1,25 \times 10^3} + \frac{220 \times (2 \times 240 - 6 \times 18 - 2 \times 9) \times 10}{\sqrt{3} \times 1,1 \times 10^3}$$

$$= 72,1 + 408,8 = 480 \text{ kN}$$

Design resistance of the bolts in shear

Design resistance of class 50 and M16 bolt of sectional area $A = A_s = 157$ mm^2:

$$F_{v,Rd} = \frac{\alpha f_{ub} A}{\gamma_{M2}}$$ Eq. 7.11

The value of α may be defined in the National Annex. The recommended value is 0,6, which applies if the shear plane passes through the unthreaded or threaded portions of the bolt. Section 7.2.4

$$F_{v,Rd} = \frac{\alpha f_{ub} A}{\gamma_{M2}} = \frac{0,6 \times 500 \times 157}{1,25 \times 10^3} = 37,7 \text{ kN}$$

Design resistance of the bolt group in shear:
$n_b F_{v,Rd} = 8 \times 37,7 = 302$ kN

Design resistance of the bolts/ply in bearing

The design resistance for bolted connections susceptible to bearing failure is given by: Section 7.2.3

$$F_{b,Rd} = \frac{2,5\alpha_b k_t t d f_u}{\gamma_{M2}}$$ Eq. 7.1

Design resistance in bearing on the ply with t = 10 mm for the M16 bolt at the end.
End distances $e_1 = 30$ mm, edge distances $e_2 = 25$ mm (> $1,2d_0 = 21,6$ mm), and bolt spacings $p_1 = 60$ mm and $p_2 = 35$ mm.

Bolted connections are classified into two groups, based on the thickness of the connected plates. Thick plate connections are those between plates with thicknesses greater than 4 mm, while connections between plates with thicknesses less than or equal to 4 mm are defined as thin plate connections. Section 7.2.3

This example is a thick plate connection with $t_{min} = 10$ mm and deformation should not be a key design consideration.

For the end bolt nearest the ends where $e_1 = 30$ mm and $p_1 = 60$ mm the bearing coefficient α_b in the load transfer direction is determined as follows:

$$\alpha_b = \min\left\{\begin{matrix} 1,0 \\ \dfrac{e_1}{3d_0} \end{matrix}\right\}$$

$$= \min\left\{\begin{matrix} 1,0 \\ \dfrac{30}{3 \times 18} = 0,556 \end{matrix}\right\} = 0,556$$

The bearing coefficient k_t in the direction perpendicular to load transfer is determined as follows:

$$k_t = \left\{\begin{matrix} 1,0 & \text{for } \left(\dfrac{e_2}{d_0}\right) > 1,5 \\ 0,8 & \text{for } \left(\dfrac{e_2}{d_0}\right) \le 1,5 \end{matrix}\right\}$$

$$k_t = 0,8 \qquad \text{for } \frac{e_2}{d_0} = \frac{25}{18} = 1,39 \le 1,5$$

The design resistance for this bolted connection susceptible to bearing failure for the end bolt is as follows:

$$F_{b,Rd} = \frac{2,5\alpha_b k_t t d f_u}{\gamma_{M2}} = \frac{2,5 \times 0,556 \times 0,8 \times 10 \times 16 \times 530}{1,25 \times 10^3} = 75,44 \text{ kN}$$ Eq. 7.1

Design resistance of the joint in bearing:

$n_b F_{b,Rd} = 8 \times 75,44 = 604$ kN

Design resistance of the joint at the Ultimate Limit State

Design resistance of the angle gross cross-section in tension	$N_{pl,Rd}$	383 kN
Design resistance of the angle net cross-section in tension	$N_{u,Rd}$	391 kN
Design resistance of the angle in block tearing (for staggered rows)	$V_{eff,2,Rd}$	283 kN
Design resistance of the angle in block tearing (for non staggered rows)	$V_{eff,2,Rd}$	**274 kN**
Design resistance of the gusset plate gross cross-section in tension	$N_{pl,Rd}$	480 kN
Design resistance of the gusset plate net cross-section in tension	$N_{u,Rd}$	892 kN
Design resistance of the gusset plate net cross-section in tension (at the 1st bolt hole near the gusset plate edge)	$N_{u,Rd}$	421 kN
Design resistance of the gusset plate in block tearing (for staggered rows)	$V_{eff,1,Rd}$	508 kN
Design resistance of the gusset plate in block tearing (for non staggered rows)	$V_{eff,1,Rd}$	480 kN
Design resistance of the bolts in shear	$F_{v,Rd}$	302 kN
Design resistance of the bolts/ply in bearing	$F_{b,Rd}$	604 kN

The smallest design resistance is for the angle in block tearing (for non staggered rows):

$V_{eff,2,Rd} = 274$ kN

Note: The critical mode for all of the bolts in the joint is shear ($F_{v,Rd}$ = 302 kN).

DESIGN EXAMPLE 7 – SHEAR RESISTANCE OF PLATE GIRDER

Design a plate girder with respect to shear resistance. The girder is a simply supported I-section with a span according to the figure below. The top flange is laterally restrained.

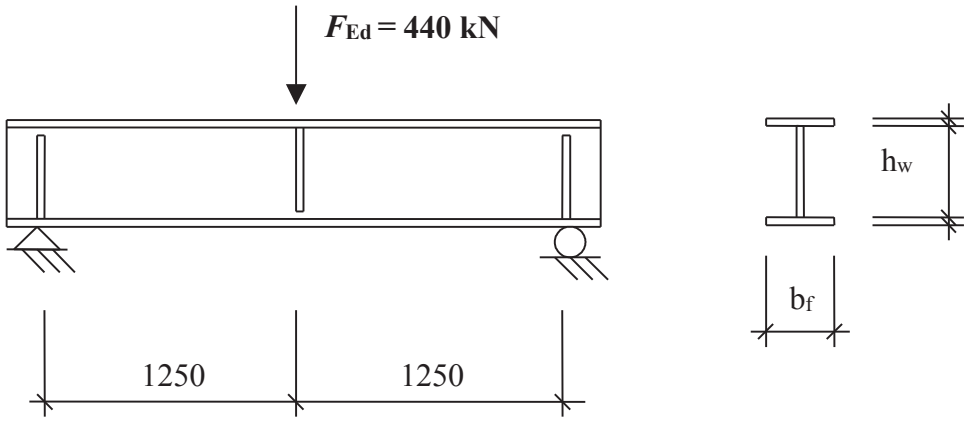

Use lean duplex grade 1.4162

f_y = 480 N/mm² for hot rolled strip — Table 2.2

E = 200000 N/mm² — Section 2.3.1

Try a cross section with

Flanges:	12 × 200 mm²
Web:	4 × 500 mm²
Stiffeners:	12 × 98 mm²
Weld throat thickness:	4 mm

Structural analysis

Maximum shear and bending moment are obtained as

$$V_{Ed} = \frac{F_{Ed}}{2} = \frac{440}{2} = 220\text{kN}$$

$$M_{Ed} = \frac{F_{Ed} L}{4} = \frac{440 \times 2{,}5}{4} = 275\text{kNm}$$

Partial factors

γ_{M0} = 1,1 — Table 4.1

γ_{M1} = 1,1

Classification of the cross-section

Section 5.3

Table 5.2

$$\varepsilon = \sqrt{\frac{235}{480} \times \frac{200}{210}} = 0{,}683$$

Web, subject to bending — Table 5.2

$$\frac{c}{t\varepsilon} = \frac{500-2\times\sqrt{2}\times 4}{4\times 0,683} = 178,9 > 90$$ therefore the web is Class 4.

Flange, subject to compression — Table 5.2

$$\frac{c}{t\varepsilon} = \frac{200-4-2\times\sqrt{2}\times 4}{2\times 12\times 0,683} = 11,3 \le 14,0$$ therefore the compression flange is Class 3

Thus, overall classification of cross-section is Class 4.

Shear resistance — Section 6.4.3

The shear buckling resistance requires checking when $h_w / t_w \ge \frac{24,3}{\eta}\varepsilon\sqrt{k_\tau}$ for vertically stiffened webs.

a/h_w = 1250/500 = 2,5 > 1, and since the web is not stiffened, $k_{\tau st}$=0. Hence,

$$k_\tau = 5,34+4\left(\frac{h_w}{a}\right)^2 = 5,34+4\left(\frac{500}{1250}\right)^2 = 5,98$$ — Eq. 6.26

EN 1993-1-4 recommended value for η=1,2 — Section 6.4.3

$$h_w/t_w = \frac{500}{4} = 125 \ge \frac{24,3}{1,2}\times 0,683\times\sqrt{5,98} = 33,8$$

Therefore, the shear buckling resistance has to be checked. It is obtained as

$$V_{b,Rd} = V_{bw,Rd} + V_{bf,Rd} \le \frac{\eta f_{yw} h_w t_w}{\sqrt{3}\,\gamma_{M1}} = \frac{1,2\times 480\times 500\times 4}{\sqrt{3}\times 1,1}\times 10^{-3} = 604,6\text{ kN}$$ — Eq. 6.22

$$V_{bw,Rd} = \frac{\chi_w f_{yw} h_w t_w}{\sqrt{3}\,\gamma_{M1}}$$ — Eq. 6.23

For non-rigid end posts:

$$\bar{\lambda}_w = \left(\frac{h_w}{37,4 t_w\,\varepsilon\sqrt{k_\tau}}\right) = \left(\frac{500}{37,4\times 4\times 0,683\times\sqrt{5,98}}\right) = 2,00 > 0,65$$ — Eq. 6.25

$$\chi_w = \frac{1,19}{\left(0,54+\bar{\lambda}_w\right)} \qquad \text{for } \bar{\lambda}_w \ge 0,65$$ — Table 6.3

Hence the contribution from the web is obtained as

$$\chi_w = \frac{1,19}{\left(0,54+2,00\right)} = 0,468$$ — Table 6.3

$$V_{bw,Rd} = \frac{\chi_w f_{yw} h_w t_w}{\sqrt{3}\gamma_{M1}} = \frac{0,468\times 480\times 500\times 4}{\sqrt{3}\times 1,1}\times 10^{-3} = 235,9\text{ kN}$$ — Eq. 6.23

The contribution from the flanges may be utilised if the flanges are not fully utilised in withstanding the bending moment. The bending resistance of a cross section consisting of the flanges only is obtained as — Section 6.4.3

$$M_{f,Rd} = 12\times 200\times\frac{480}{1,1}\times(500+12)\times 10^{-6} = 536,2\text{ kNm}$$

$M_{f,Rd} > M_{Ed}$ = 275 kNm, therefore the flanges can contribute to the shear buckling resistance.

$$V_{\mathrm{bf,Rd}} = \frac{b_{\mathrm{f}} t_{\mathrm{f}}^2 f_{\mathrm{yf}}}{c\gamma_{M1}}\left[1-\left[\frac{M_{\mathrm{Ed}}}{M_{\mathrm{f,Rd}}}\right]^2\right]$$ Eq. 6.29

$$c = a\left[0{,}17+\frac{3{,}5 b_{\mathrm{f}} t_{\mathrm{f}}^2 f_{\mathrm{yf}}}{t_{\mathrm{w}} h_{\mathrm{w}}^2 f_{\mathrm{yw}}}\right] \quad \text{but} \quad \frac{c}{a} \le 0{,}65$$ Eq. 6.30

$$= 1250\times\left[0{,}17+\frac{3{,}5\times 200\times 12^2\times 480}{4\times 500^2\times 480}\right] = 338{,}5\ \mathrm{mm}$$

$$338{,}5\mathrm{mm} < 0{,}65\times 1250 = 812{,}5\ \mathrm{mm}$$

$$V_{\mathrm{bf,Rd}} = \frac{200\times 12^2\times 480}{338\times 1{,}1}\times\left[1-\left[\frac{275}{536{,}2}\right]^2\right] = 27{,}4\ \mathrm{kN}$$ Eq. 6.29

$$V_{\mathrm{b,Rd}} = V_{\mathrm{bw,Rd}} + V_{\mathrm{bf,Rd}} = 235{,}8 + 27{,}4 = 263{,}2\ \mathrm{kN} \le 604{,}6\ \mathrm{kN}$$ Eq. 6.22

Transverse stiffeners — Section 6.4.5

The transverse stiffeners have to be checked for crushing and flexural buckling using $\alpha = 0{,}49$ and $\bar{\lambda}_0 = 0{,}2$. An effective cross section consisting of the stiffeners and parts of the web is then used. The part of the web included is $11\varepsilon t_w$ wide, therefore the cross section of the transverse stiffener is Class 3. — Table 6.1

$a/h_{\mathrm{w}} = 1250/500 = 2{,}5 \ge \sqrt{2}$, hence the second moment of area of the intermediate stiffener has to fulfil — Eq. 6.51

$$I_{\mathrm{st}} \ge 0{,}75 h_{\mathrm{w}} t_{\mathrm{w}}^3 = 0{,}75\times 500\times 4^3 = 24000\ \mathrm{mm}^4$$ Eq. 6.51

$$I_{\mathrm{st}} = 2\times\frac{(11\times 0{,}683\times 4)\times 4^3}{12} + \frac{12\times 200^3}{12} = 8{,}00\times 10^6\ \mathrm{mm}^4,$$ hence fulfilled.

The crushing resistance is obtained as

$$N_{\mathrm{c,Rd}} = A_{\mathrm{g}} f_{\mathrm{y}}/\gamma_{\mathrm{M0}}$$ Eq. 5.27

$$A_{\mathrm{g}} = (12\times 200 + 11\times 0{,}683\times 4\times 2) = 2460{,}1\ \mathrm{mm}^2$$

$$N_{\mathrm{c,Rd}} = 2460{,}1\times 480\times 10^{-3}/1{,}1 = 1073{,}5\ \mathrm{kN}$$

The flexural buckling resistance is obtained as

$$N_{\mathrm{b,Rd}} = \chi A f_{\mathrm{y}}/\gamma_{\mathrm{M1}}$$ Eq. 6.2

$$\chi = \frac{1}{\varphi+\left[\varphi^2-\bar{\lambda}^2\right]^{0{,}5}} \le 1$$ Eq. 6.4

$$\varphi = 0{,}5\left(1+\alpha\left(\bar{\lambda}-\bar{\lambda}_0\right)+\bar{\lambda}^2\right)$$ Eq. 6.5

$$\bar{\lambda} = \frac{L_{\mathrm{cr}}}{i}\frac{1}{\pi}\sqrt{\frac{f_{\mathrm{yw}}}{E}}$$ Eq. 6.6

$$L_{\mathrm{cr}} = 0{,}75 h_{\mathrm{w}} = 0{,}75\times 500 = 375\ \mathrm{mm}$$ Section 6.4.5

$$\bar{\lambda} = \frac{375}{\sqrt{\frac{8\times 10^6}{2460{,}1}}}\times\frac{1}{\pi}\times\sqrt{\frac{480}{200000}} = 0{,}103$$ Eq. 6.6

$$\varphi = 0{,}5\times\left(1+0{,}49\times(0{,}103-0{,}2)+0{,}103^2\right) = 0{,}48$$ Eq. 6.5

$$\chi = \frac{1}{0{,}48 + \left[0{,}48^2 - 0{,}103^2\right]^{0{,}5}} = 1{,}05 > 1 \quad \Rightarrow \chi = 1{,}0$$ Eq. 6.4

Since $N_{b,Rd} = N_{c,Rd} = 1073{,}5$ kN > N_{Ed}, the transverse stiffeners are sufficient.

Interaction shear and bending

If the utilization of shear resistance, expressed as the factor $\bar{\eta}_3$, exceeds 0,5, the combined effect of bending and shear has to be checked. Section 6.4.3

$$\bar{\eta}_3 = \frac{V_{Ed}}{V_{bw,Rd}} \leq 1{,}0$$ Eq. 6.36

$$\bar{\eta}_3 = \frac{220}{235{,}9} = 0{,}933 > 0{,}5$$, therefore interaction has to be considered.

The condition is

$$\bar{\eta}_1 + \left(1 - \frac{M_{f,Rd}}{M_{pl,Rd}}\right)\left(2\bar{\eta}_3 - 1\right)^2 \leq 1{,}0 \text{ for } \bar{\eta}_1 \geq \frac{M_{f,Rd}}{M_{pl,Rd}}$$ Eq. 6.34

Where:

$$\bar{\eta}_1 = \frac{M_{Ed}}{M_{pl,Rd}}$$ Eq. 6.35

$M_{f,Rd}$ = 536,2 kNm (Sheet 3)

$M_{pl,Rd}$ is the plastic resistance of the cross-section.

$$M_{pl,Rd} = M_{f,Rd} + \frac{t_w h_w^2 f_y}{4\gamma_{M0}} = 536{,}2 + \frac{4 \times 500^2 \times 480}{4 \times 1{,}1 \times 10^6} = 645{,}3 \text{ kNm}$$

Evaluate conditions

M_{Ed} = 275 kNm, hence:

$$\bar{\eta}_1 = \frac{275}{645{,}3} = 0{,}426 \leq 1{,}0 \text{ OK}$$ Eq. 6.35

$\bar{\eta}_1$ fulfils its condition. Now it remains to check the interaction.

$$\bar{\eta}_1 + \left(1 - \frac{M_{f,Rd}}{M_{pl,Rd}}\right)\left(2\bar{\eta}_3 - 1\right)^2 = 0{,}426 + \left(1 - \frac{536{,}2}{645{,}3}\right) \times \left(2 \times 0{,}933 - 1\right)^2 = 0{,}553 < 1{,}0$$

It therefore follows that under the conditions given, the resistance of the plate girder is sufficient with respect to shear, bending as well as interaction between shear and bending.

Calculation of effective cross-section properties

The flanges are Class 3 and hence fully effective.

The depth of the web has to be reduced with the reduction factor ρ, welded web.

$$\rho = \frac{0{,}772}{\bar{\lambda}_p} - \frac{0{,}079}{\bar{\lambda}_p^{\,2}} \leq 1$$ Eq. 5.1

$$\bar{\lambda}_p = \frac{\bar{b}/t}{28{,}4\varepsilon\sqrt{k_\sigma}} \quad \text{where } \bar{b} = d = 500 - 2 \times 4 \times \sqrt{2} = 488{,}68 \text{ mm}$$ Eq. 5.3

Assuming linearly varying, symmetric stress distribution within the web,

$$\psi = \frac{\sigma_2}{\sigma_1} = -1$$

$\Rightarrow k_\sigma = 23{,}9$ — Table 5.3

$$\bar{\lambda}_p = \frac{488{,}68/4}{28{,}4 \times 0{,}683 \times \sqrt{23{,}9}} = 1{,}29$$ — Eq. 5.3

$$\rho = \frac{0{,}772}{1{,}29} - \frac{0{,}079}{1{,}29^2} = 0{,}55 \le 1$$ — Eq. 5.1

$b_{eff} = \rho\, b_c = \rho\, \bar{b} / (1\text{-}\psi) = 0{,}55 \times 488{,}68/(1-(-1)) = 134{,}76\,\text{mm}$ — Table 5.3

$b_{e1} = 0{,}4 b_{eff} = 0{,}4 \times 134{,}76 = 53{,}9\,\text{mm}$ — Table 5.3

$b_{e2} = 0{,}6 b_{eff} = 0{,}6 \times 134{,}76 = 80{,}9\,\text{mm}$

Calculation of effective section modulus under bending

e_i is taken as positive from the centroid of the upper flange and downwards.

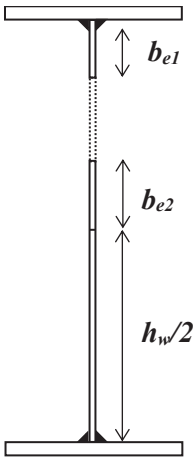

$$A_{eff} = \sum_i A_i = b_f t_f \times 2 + \left(b_{e1} + 4\sqrt{2}\right) t_w + b_{e2} t_w + \left(h_w/2\right) t_w = 6361{,}7\,\text{mm}^2$$

$$e_{eff} = \frac{1}{A_{eff}} \sum_i A_i e_i = \frac{1}{A_{eff}} \left[b_f t_f (0) + b_f t_f \left(h_w + t_f\right) \right] + \frac{1}{A_{eff}} \left[\left(b_{e1} + 4\sqrt{2}\right) t_w \left(0{,}5\left(\left(b_{e1} + 4\sqrt{2}\right) + t_f\right)\right) \right.$$
$$\left. + \; b_{e2} t_w \left(0.5\left(h_w + t_f\right) - b_{e2}/2\right) + \left(h_w/2\right) t_w \left(0{,}75 h_w + 0{,}5 t_f\right) \right] = 266{,}4\ \text{mm}$$

$$I_{eff} = \sum_i I_i + \sum_i A_i (e_{eff} - e_i)^2 = 2 \times \frac{b_f t_f^3}{12} + \frac{t_w \left(b_{e1} + 4\sqrt{2}\right)^3}{12} + \frac{t_w b_{e2}^3}{12} + \frac{t_w \left(h_w/2\right)^3}{12}$$
$$+ \; b_f t_f \left(e_{eff} - 0\right)^2 + b_f t_f \left[e_{eff} - \left(h_w + t_f\right)\right]^2 + \left(b_{e1} + 4\sqrt{2}\right) t_w \left[e_{eff} - 0{,}5\left(\left(b_{e1} + 4\sqrt{2}\right) + t_f\right)\right]^2$$
$$+ \; b_{e2} t_w \left[e_{eff} - 0{,}5\left(h_w + t_f - b_{e2}\right)\right]^2 + \left(h_w/2\right) t_w \left[e_{eff} - \left(0{,}75 h_w + 0{,}5 t_f\right)\right]^2$$
$$= 3{,}472 \times 10^8\ \text{mm}^4$$

DESIGN EXAMPLE 8 – RESISTANCE TO CONCENTRATED LOADS

An existing plate girder, previously subjected to an evenly distributed load, will be refurbished and will be subjected to a concentrated load. Check if the girder can resist the new load applied through a 12 mm thick plate. The girder is a simply supported I-section with a span according to the figure below. The top flange is laterally restrained.

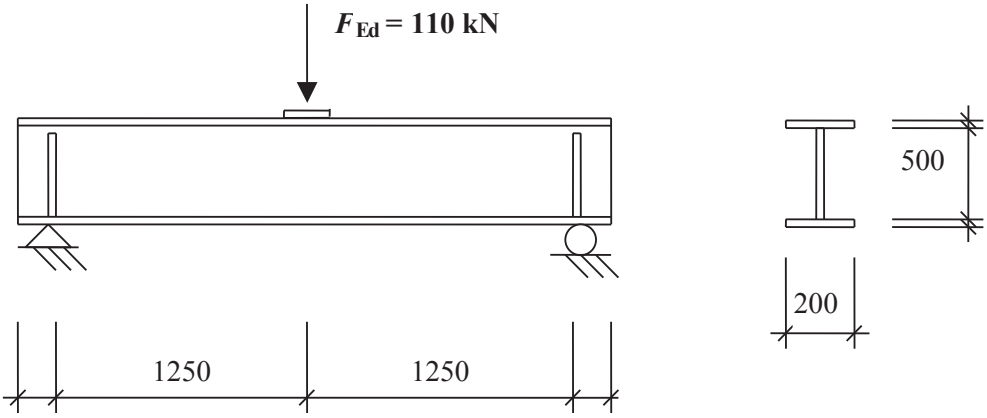

Use duplex grade 1.4462

f_y = 460 N/mm² for hot rolled strip — Table 2.2

E = 200000 N/mm² — Section 2.3.1

Flanges: 12 × 200 mm²
Web: 4 × 500 mm²
Stiffeners: 12 × 98 mm²
Weld throat thickness: 4 mm

Structural analysis

Maximum shear and bending moment are obtained as

$$V_{Ed} = \frac{F_{Ed}}{2} = \frac{110}{2} = 55\,\text{kN}$$

$$M_{Ed} = \frac{F_{Ed}L}{4} = \frac{110 \times 2{,}5}{4} = 68{,}75\,\text{kNm}$$

Partial safety factors

γ_{M0} = 1,1 — Table 4.1

γ_{M1} = 1,1

Classification of the cross-section

Section 5.3

$$\varepsilon = \sqrt{\frac{235}{460} \times \frac{200}{210}} = 0{,}698$$

Table 5.2

Web, subject to bending — Table 5.2

$$\frac{c}{t\varepsilon} = \frac{500-2\times\sqrt{2}\times 4}{4\times 0{,}698} = 175{,}1 > 90$$, therefore the web is Class 4.

Flange, subject to compression — Table 5.2

$$\frac{c}{t\varepsilon} = \frac{200-4-2\times\sqrt{2}\times 4}{2\times 12\times 0{,}698} = 11{,}0 \le 14{,}0$$, and the compression flange is Class 3.

Thus, overall classification of cross-section is Class 4.

Resistance to concentrated force — Section 6.4.4

The design load should not exceed the design resistance, i.e.

$$F_{\mathrm{Rd}} = f_{\mathrm{yw}} L_{\mathrm{eff}} t_w / \gamma_{\mathrm{M1}}$$ — Eq. 6.37

The effective length L_{eff} is given by

$$L_{\mathrm{eff}} = \chi_{\mathrm{F}} l_{\mathrm{y}}$$ — Eq. 6.45

where the reduction function is

$$\chi_{\mathrm{F}} = \frac{0{,}5}{\bar{\lambda}_{\mathrm{F}}} \le 1.0$$ — Eq. 6.46

with the slenderness given by

$$\bar{\lambda}_{\mathrm{F}} = \sqrt{\frac{l_{\mathrm{y}} t_{\mathrm{w}} f_{\mathrm{yw}}}{F_{\mathrm{cr}}}}$$ — Eq. 6.47

The effective loaded length is given by

$$l_{\mathrm{y}} = s_{\mathrm{s}} + 2t_{\mathrm{f}}\left(1+\sqrt{m_1+m_2}\right)$$ — Eq. 6.41

Where

s_s is the length of the stiff bearing and m_1 and m_2 are dimensionless parameters:

$$m_1 = \frac{f_{\mathrm{yf}} b_{\mathrm{f}}}{f_{\mathrm{yw}} t_{\mathrm{w}}}$$ — Eq. 6.38

$$m_2 = 0{,}02\left(\frac{h_{\mathrm{w}}}{t_{\mathrm{f}}}\right)^2 \quad \text{for } \bar{\lambda}_{\mathrm{F}} > 0{,}5$$ — Eq. 6.39

$$m_2 = 0 \quad \text{for } \bar{\lambda}_{\mathrm{F}} \le 0{,}5$$ — Eq. 6.40

s_s is conservatively taken as twice the thickness of the load bearing plate, i.e. 24 mm. — Figure 6.5

$$m_1 = \frac{460\times 200}{460\times 4} = 50$$ — Eq. 6.38

$$m_2 = 0{,}02\times\left[\frac{500}{12}\right]^2 = 34{,}7$$, assuming $\bar{\lambda}_{\mathrm{F}} > 0{,}5$ — Eq. 6.39

$$l_{\mathrm{y}} = 24+2\times 12\times\left(1+\sqrt{50+34{,}7}\right) = 268{,}9\ \mathrm{mm}$$ — Eq. 6.41

The critical load is obtained as

$$F_{\mathrm{cr}} = 0{,}9\, k_{\mathrm{F}}\, E\, \frac{t_{\mathrm{w}}^3}{h_{\mathrm{w}}}$$ — Eq. 6.48

where the buckling coefficient is given by the load situation, type a.

$$k_{\mathrm{F}} = 6+2\left[\frac{h_{\mathrm{w}}}{a}\right]^2 = 6+2\times\left[\frac{500}{2500}\right]^2 = 6{,}08$$ — Figure 6.4

$$F_{cr} = 0,9 \times 6,08 \times 200000 \times \frac{4^3}{500} \times 10^{-3} = 140,1\,\text{kN}$$ Eq. 6.48

$$\bar{\lambda}_F = \sqrt{\frac{268,9 \times 4 \times 460}{140,1 \times 10^3}} = 1,88 > 0,5\text{, assumption OK}$$ Eq. 6.47

$$\chi_F = \frac{0,5}{1,88} = 0,27 \leq 1,0\text{, OK}$$ Eq. 6.46

$$L_{eff} = 0,27 \times 268,9 = 72,6\,\text{mm}$$

$$F_{Ed} = 110 \leq 460 \times 72,6 \times 4 / (1,1 \times 10^3) = 121,4\,\text{kN}$$ Eq. 6.37

Hence the resistance exceeds the load.

Interaction between transverse force, bending moment and axial force

Interaction between concentrated load and bending moment is checked according to EN1993-1-5:2006.

$$0,8 \times \eta_1 + \eta_2 \leq 1,4$$ EN 1993-1-5, Eq. 7.2

Where

$$\eta_1 = \frac{N_{Ed}}{f_y\, A_{eff} / \gamma_{M0}} + \frac{M_{Ed} + N_{Ed}\, e_N}{f_y\, W_{eff} / \gamma_{M0}} \leq 1,0$$ EN 1993-1-5, Eq. 4.14

$$\eta_2 = \frac{F_{Ed}}{f_{yw}\, L_{eff}\, t_w / \gamma_{M1}} \leq 1,0$$ EN 1993-1-5, Eq. 6.14

Calculation of effective cross-section properties

The flanges are Class 3 and hence fully effective.

The depth of the web has to be reduced with the reduction factor ρ, welded web.

$$\rho = \frac{0,772}{\bar{\lambda}_p} - \frac{0,079}{\bar{\lambda}_p^{\,2}} \leq 1$$ Eq. 5.1

$$\bar{\lambda}_p = \frac{\bar{b}/t}{28,4\varepsilon\sqrt{k_\sigma}} \quad \text{where b} = \text{d} = 500 - 2 \times 4 \times \sqrt{2} = 488,68\ \text{mm}$$ Eq. 5.3

Assuming linearly varying symmetric stress distribution within the web,

$$\psi = \frac{\sigma_2}{\sigma_1} = -1$$

$$\Rightarrow k_\sigma = 23,9$$ Table 5.3

$$\bar{\lambda}_p = \frac{488,68/4}{28,4 \times 0,698 \times \sqrt{23,9}} = 1,26$$

$$\rho = \frac{0,772}{1,26} - \frac{0,079}{1,26^2} = 0,562 \leq 1$$

$$b_{eff} = \rho\, b_c = \rho\, b / (1\text{-}\psi) = 0,562 \times 488,68 / (1-(-1)) = 137,3\,\text{mm}$$ Table 5.3

$$b_{e1} = 0,4 b_{eff} = 0,4 \times 137,3 = 54,9\,\text{mm}$$

$$b_{e2} = 0,6 b_{eff} = 0,6 \times 137,3 = 82,4\,\text{mm}$$

Calculate effective section modulus under bending

e_i is taken as positive from the centroid of the upper flange and downwards.

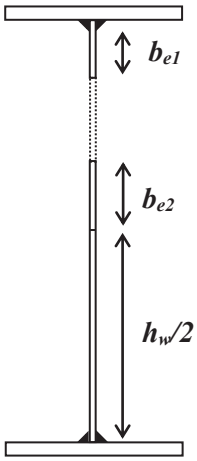

$$A_{\text{eff}} = \sum_i A_i = b_f t_f \times 2 + \left(b_{e1} + 4\sqrt{2}\right)t_w + b_{e2}t_w + \left(h_w/2\right)t_w = 6372{,}2\ \text{mm}^2$$

e_{eff}=

$$\frac{1}{A_{\text{eff}}}\sum_i A_i e_i = \frac{1}{A_{\text{eff}}}\left[\, b_f t_f (0) + b_f t_f (h_w + t_f)\right] + \frac{1}{A_{\text{eff}}}\left[\left(b_{e1} + 4\sqrt{2}\right)t_w\left(0{,}5\left(\left(b_{e1} + 4\sqrt{2}\right) + t_f\right)\right)\right.$$

$$\left. +\ b_{e2}t_w\left(0{,}5\left(h_w + t_f\right) - b_{e2}/2\right) + \left(h_w/2\right)t_w\left(0{,}75h_w + 0{,}5t_f\right)\ \right] = 266{,}4\ \text{mm}$$

$$I_{\text{eff}} = \sum_i I_i + \sum_i A_i (e_{\text{eff}} - e_i)^2 = 2 \times \frac{b_f t_f^{\,3}}{12} + \frac{t_w\left(b_{e1} + 4\sqrt{2}\right)^3}{12} + \frac{t_w b_{e2}^{\,3}}{12} + \frac{t_w\left(h_w/2\right)^3}{12}$$

$$+\ b_f t_f\left(e_{\text{eff}} - 0\right)^2 + b_f t_f\left[e_{\text{eff}} - \left(h_w + t_f\right)\right]^2 + \left(b_{e1} + 4\sqrt{2}\right)t_w\left[e_{\text{eff}} - 0{,}5\left(\left(b_{e1} + 4\sqrt{2}\right) + t_f\right)\right]^2$$

$$+\ b_{e2}t_w\left[e_{\text{eff}} - 0{,}5\left(h_w + t_f - b_{e2}\right)\right]^2 + \left(h_w/2\right)t_w\left[e_{\text{eff}} - \left(0{,}75h_w + 0{,}5t_f\right)\right]^2$$

$$= 3{,}475 \times 10^8\ \text{mm}^4$$

$$W_{\text{eff}} = \frac{I_{\text{eff}}}{e_{\text{eff}} + 0{,}5t_f} = 1{,}293 \times 10^6\ \text{mm}^3$$

$$\eta_1 = \frac{68{,}75 \times 10^6}{460 \times 1{,}293 \times 10^6 / 1{,}1} = 0{,}127$$

EN 1993-1-5 Eq. 4.14

$$\eta_2 = \frac{110}{119{,}63} = 0{,}919$$

EN 1993-1-5 Eq. 6.14

$$0{,}8\eta_1 + \eta_2 = 0{,}8 \times 0{,}1293 + 0{,}919 = 1{,}021 < 1{,}4$$

Therefore, the resistance of the girder to interaction between concentrated load and bending moment is adequate.

Shear resistance

Section 6.4.3

The shear buckling resistance requires checking when $h_w / t_w \geq \frac{56{,}2}{\eta}\varepsilon$ for unstiffened webs.

Eq. 6.20

$$h_w / t_w = 500/4 = 125 \geq \frac{56{,}2}{1{,}2} \times 0{,}698 = 32{,}7$$

Therefore the shear buckling resistance has to be checked. It is obtained as

$$V_{b,Rd} = V_{\mathrm{bw,Rd}} + V_{\mathrm{bf,Rd}} \leq \frac{\eta f_{\mathrm{yw}} h_{\mathrm{w}} t_w}{\sqrt{3}\,\gamma_{\mathrm{M1}}}$$ Eq. 6.22

$$V_{\mathrm{bw,Rd}} = \frac{\chi_{\mathrm{w}}\, f_{\mathrm{yw}}\, h_{\mathrm{w}}\, t_{\mathrm{w}}}{\gamma_{\mathrm{M1}}\sqrt{3}}$$ Eq. 6.23

For non-rigid end posts Table 6.3 provides

$$\bar{\lambda}_{\mathrm{w}} = \left(\frac{h_{\mathrm{w}}}{86{,}4 t_{\mathrm{w}}\,\varepsilon}\right) = \left(\frac{500}{86{,}4 \times 4 \times 0{,}698}\right) = 2{,}07 > 0{,}65$$ Eq. 6.24

$$\chi_{\mathrm{w}} = \frac{1{,}19}{0{,}54 + \bar{\lambda}_{\mathrm{w}}} \qquad \text{for } \bar{\lambda}_{\mathrm{w}} \geq 0{,}65$$ Table 6.3

$$\chi_{\mathrm{w}} = \frac{1{,}19}{0{,}54 + 2{,}07} = 0{,}455$$ Table 6.3

The contribution from the flanges may be utilised if the flanges are not fully utilised to withstand the bending moment. However, the contribution is small and is conservatively not taken into account, i.e. $V_{\mathrm{bf,Rd}} = 0$.

The shear buckling resistance can be calculated as:

$$V_{\mathrm{b,Rd}} = V_{\mathrm{bw,Rd}} = \frac{0{,}455 \times 460 \times 500 \times 4}{1{,}1 \times \sqrt{3}} \times 10^{-3} = 219{,}8 \text{ kN} < \frac{\eta f_{\mathrm{yw}} h_{\mathrm{w}} t_{\mathrm{w}}}{\sqrt{3}\gamma_{M1}} = 579{,}45 \text{ kN}$$ Eq. 6.23

$V_{\mathrm{b,Rd}} = V_{\mathrm{bw,Rd}} > V_{\mathrm{Ed}} = 55$ kN

The shear resistance of the girder is thus adequate.

Interaction between shear and bending

If $\overline{\eta_3}$ does not exceed 0,5, the resistance to bending moment and axial force does not need to be reduced to allow for shear.

$$\overline{\eta_3} = \frac{V_{\mathrm{Ed}}}{V_{\mathrm{bw,Rd}}} \leq 1{,}0$$ Eq. 6.36

$$= \frac{55}{219{,}8} = 0{,}25 \leq 0{,}5$$, therefore interaction need not to be considered.

Concluding remarks

The resistance of the girder exceeds the load imposed. Note that the vertical stiffeners at supports have not been checked. It should be done according to the procedure used in Design Example 7.

Promotion of new Eurocode rules for structural stainless steels (PUREST)	Title	Design Example 9 - Beam with unrestrained compression flange		
CALCULATION SHEET	Client	Research Fund for Coal and Steel	Made by SMH	Date 09/01
			Revised by NRB	Date 04/06
			Revised by SJR	Date 04/17

DESIGN EXAMPLE 9 - BEAM WITH UNRESTRAINED COMPRESSION FLANGE

Design a staircase support beam. The beam is a channel, simply supported between columns. The flight of stairs between A and C provides restraint to the top flange of this part of the beam. The top flange is unrestrained between B and C. The overall span of the beam is taken as 4,2 m.

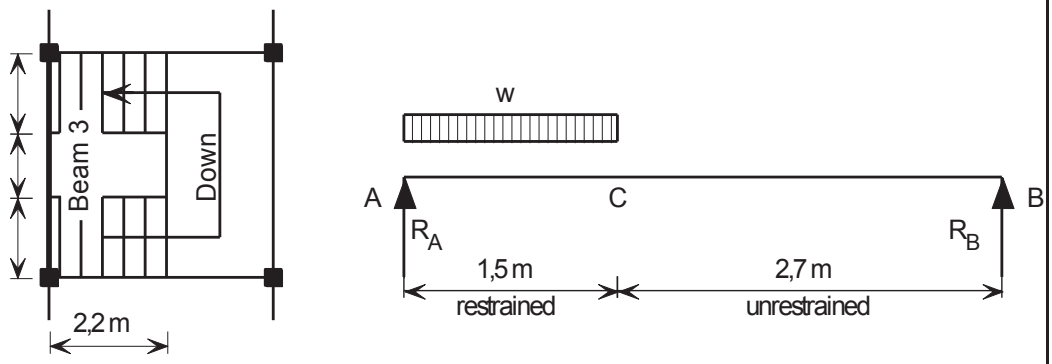

Actions

Assuming the beam carries the load from the first run of stairs to the landing only:

Permanent actions (G): Load on stairs 1,0 kN/m^2 = 1,0 × 2,2 = 2,2 kN/m

Self-weight of beam 0,13 kN/m

Variable actions (Q): Load on stairs 4 kN/m^2 = 4,0 × 2,2 = 8,8 kN/m

Load case to be considered (ultimate limit state):

$$\sum_{j\geq 1}\gamma_{G,j}G_{k,j} + \gamma_{Q,1}Q_{k,1} + \sum_{i>1}\gamma_{Q,i}\psi_{0,i}Q_{k,i}$$

As there is only one variable action ($Q_{k,1}$ the last term in the above expression does not need to be considered in this example.

$\gamma_{G,j}$ = 1,35 (unfavourable effects)

$\gamma_{Q,1}$ = 1,5

Factored actions

Permanent action:	Load on stairs	= 1,35 × 2,2	= 2,97 kN/m
	Self-weight of beam	= 1,35 × 0,13	= 0,18 kN/m
Variable action:	Load on stairs	= 1,5 × 8,8	= 13,2 kN/m

Structural analysis

Reaction at support points:

$R_A + R_B$ = (2,97 + 13,2) × 1,5 + 0,18 × 4,2 = 25,01 kN

Taking moments about A:

$$R_B = \frac{1{,}5\times(2{,}97+13{,}2)\times 0{,}75+0{,}18\times 4{,}2\times(4{,}2/2)}{4{,}2} = 4{,}71 \text{ kN}$$

$\Rightarrow R_A = 25{,}01 - 4{,}71 = 20{,}30$ kN

Maximum bending moment occurs at a distance: $1{,}5\times\left(1-\frac{1{,}5}{2\times 4{,}2}\right) = 1{,}23$ m from A.

$$M_{Ed,max} = 20{,}30\times 1{,}23-(2{,}97+13{,}2)\times\frac{1{,}23^2}{2}-0{,}18\times\frac{1{,}23^2}{2} = 12{,}60 \text{ kNm}$$

Maximum shear occurs at A:

$F_{Ed,max} = 20{,}30$ kN

Material properties

Use austenitic grade 1.4401

0,2% proof stress = 240 N/mm^2 (for cold formed steel sheet) — Table 2.2

f_y = 240 N/mm^2

E = 200000 N/mm^2 and G = 76900 N/mm^2 — Section 2.3.1

$\Rightarrow$ Try a 200 × 75 channel section, thickness t = 5 mm.

Cross-section properties

$I_y = 9{,}456 \times 10^6$ mm^4 $\quad W_{el,y} = 94{,}56 \times 10^3$ mm^3

$I_z = 0{,}850 \times 10^6$ mm^4 $\quad W_{pl,y} = 112{,}9 \times 10^3$ mm^3

$I_w = 5085 \times 10^6$ mm^4 $\quad A_g = 1650$ mm^2

$I_t = 1{,}372 \times 10^4$ mm^4

Classification of the cross-section — Section 5.3.2

$$\varepsilon = \sqrt{\frac{235}{f_y}\frac{E}{210\,000}} = \sqrt{\frac{235}{240}\times\frac{200\,000}{210\,000}} = 0{,}97$$ — Table 5.2

Assume conservatively that $c = h - 2t = 200 - 2 \times 5 = 190$ mm for web

Web subject to bending: $\frac{c}{t} = \frac{190}{5} = 38$

For Class 1, $\frac{c}{t} \le 72\varepsilon = 69{,}8$, therefore web is Class 1. — Table 5.2

Outstand flange subject to compression: $\frac{c}{t} = \frac{75}{5} = 15$

For Class 3, $\frac{c}{t} \le 14\varepsilon = 13{,}6$, therefore outstand flange is Class 4. — Table 5.2

$\Rightarrow$ Therefore, overall classification of cross-section is class 4.

Calculation of effective section properties — Section 5.4.1

Calculate reduction factor ρ for cold formed outstand elements:

$$\rho = \frac{1}{\bar{\lambda}_p} - \frac{0,188}{\bar{\lambda}_p^2} \quad \text{but} \leq 1$$ — Eq. 5.2

$$\bar{\lambda}_p = \frac{\bar{b}/t}{28,4\varepsilon\sqrt{k_\sigma}} \quad \text{where } \bar{b} = c = 75 \text{ mm}$$ — Eq. 5.3

Assuming uniform stress distribution within the compression flange

$$\psi = \frac{\sigma_2}{\sigma_1} = 1 \quad \Rightarrow k_\sigma = 0,43$$ — Table 5.4

$$\bar{\lambda}_p = \frac{75/5}{28,4 \times 0,97 \times \sqrt{0,43}} = 0,830$$

$$\rho = \frac{1}{0,830} - \frac{0,188}{0,830^2} = 0,932$$

$$c_{eff} = \rho \times c = 0,932 \times 75 = 69,9$$ — Table 5.4

$$A_{eff} = A_g - (1-\rho)ct = 1650 - (1-0,932) \times 75 \times 5 = 1625 \text{ mm}^2$$

Calculate shift of neutral axis of section under bending:

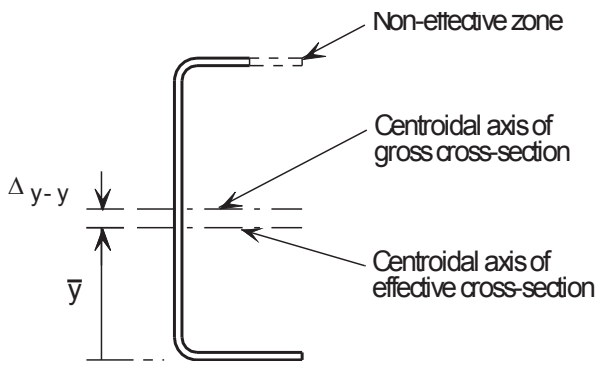

$$\bar{y} = \frac{A_g \times \frac{h}{2} - (1-\rho) \times c \times t \times \left(h - \frac{t}{2}\right)}{A_{eff}} = \frac{1650 \times \frac{200}{2} - (1-0,932) \times 75 \times 5 \times \left(200 - \frac{5}{2}\right)}{1625}$$

$$\bar{y} = 98,44$$

Shift of neutral axis position, $\Delta_{y-y} = \frac{h}{2} - \bar{y} = \frac{200}{2} - 98,44 = 1,56 \text{ mm}$

$$I_{eff,y} = \left(I_y - \frac{(1-\rho)ct^3}{12} - (1-\rho)ct\left(\frac{h}{2} - \frac{t}{2}\right)^2 - A_{eff}\,\Delta_{y-y}^2 \right)$$

$$I_{eff,y} = 9,456 \times 10^6 - \frac{(1-0,932) \times 75 \times 5^3}{12} - (1-0,932) \times 75 \times 5 \times (100 - 2,5)^2 - 1625 \times 1,56^2$$

$$I_{eff,y} = 9,21 \times 10^6 \text{ mm}^4$$

$$W_{eff,y} = \frac{I_{eff,y}}{\frac{h}{2} + \Delta_{y-y}} = \frac{9,21 \times 10^6}{\frac{200}{2} + 1,56} = 90,69 \times 10^3 \text{ mm}^3$$

Shear lag — Section 5.4.2

Shear lag may be neglected provided that $b_0 \leq L_e/50$ for outstand elements.

L_e = 4200 mm (distance between points of zero moment)

$L_e/50$ = 84 mm, b_0 = 75 mm, therefore shear lag can be neglected.

Flange curling — Section 5.4.2, EN 1993-1-3 Clause 5.4 Eq. 5.3a

$$u = \frac{2\,\sigma_a^2\,b_s^4}{E^2\,t^2\,z}$$

σ_a = 240 N/mm^2 (maximum possible value)

b_s = 75 – 5 = 70 mm

z = 100 – 2,5 = 97,5 mm

$$u = \frac{2\times 240^2\times 70^4}{200000^2\times 5^2\times 97{,}5} = 0{,}028 \text{ mm}$$

Flange curling can be neglected if u < 0,05 × 200 = 10 mm

Therefore flange curling is negligible.

Partial factors

The following partial factors are used throughout the design example:

γ_{M0} = 1,1 and γ_{M1} = 1,1 — Table 4.1

Moment resistance of cross-section

For a class 4 cross-section:

$$M_{c,Rd} = W_{eff,min} f_y/\gamma_{M0} = \frac{90{,}69\times 10^3\times 240}{1{,}1\times 10^6} = 19{,}79 \text{ kNm}$$ — Eq. 5.31

$M_{Ed,max}$ = 12,60 kNm < $M_{c,Rd}$ = 19,79 kNm

⇒ cross-section moment resistance is OK.

Cross-section resistance to shear

$$V_{pl,Rd} = A_v\left(f_y/\sqrt{3}\right)/\gamma_{M0}$$ — Eq. 5.32

A_v = h × t = 200 × 5 = 1000 mm^2

$$V_{pl,Rd} = \frac{1000\times 240}{\sqrt{3}\times 1{,}1\times 1000} = 125{,}97 \text{ kN}$$

$F_{Ed,max}$ = 20,30 kNm < $V_{pl,Rd}$ = 125,97 kNm

⇒ cross-section shear resistance is OK.

Check that shear resistance is not limited by shear buckling: — Section 6.4.3

Assume that $h_w = h - 2t$ = 200 – 2 × 5 = 190 mm

$\frac{h_w}{t} = \frac{190}{5} = 38$, shear buckling resistance needs to be checked if $\frac{h_w}{t} \geq \frac{56{,}2\varepsilon}{\eta}$ — Eq. 6.20

η = 1,20

$$\frac{h_w}{t} = 38 < \frac{56{,}2\varepsilon}{\eta} = \frac{56{,}2\times 0{,}97}{1{,}20} = 45{,}4$$

⇒ shear resistance is not limited by shear buckling.

Resistance to lateral torsional buckling — Section 6.4.2

Compression flange of beam is laterally unrestrained between B and C. Check this portion of beam for lateral torsional buckling.

$M_{b,Rd} = \chi_{LT} W_{eff,y} f_y / \gamma_{M1}$ for a Class 4 cross-section — Eq.6.13

$W_{eff,y} = 90,69 \times 10^3 \text{ mm}^3$

$$\chi_{LT} = \frac{1}{\phi_{LT} + \left[\phi_{LT}^2 - \bar{\lambda}_{LT}^2\right]^{0,5}} \leq 1$$ — Eq.6.14

$$\phi_{LT} = 0,5\left(1 + \alpha_{LT}\left(\bar{\lambda}_{LT} - 0,4\right) + \bar{\lambda}_{LT}^2\right)$$ — Eq.6.15

$$\bar{\lambda}_{LT} = \sqrt{\frac{W_y f_y}{M_{cr}}}$$ — Eq.6.16

Determine the elastic critical moment (M_{cr}): — Appendix E

$$M_{cr} = C_1 \frac{\pi^2 EI_z}{(k\,L)^2}\left(\left[\left(\frac{k}{k_w}\right)^2 \frac{I_w}{I_z} + \frac{(k\,L)^2 GI_t}{\pi^2 EI_z} + (C_2 z_g)^2\right]^{1/2} - C_2 z_g\right)$$ — Eq. E.1

C is simply supported, while B approaches full fixity. Assume most conservative case:

$k = k_w = 1,00$

C_1 and C_2 are determined from consideration of bending moment diagram and end conditions. — E.3

From bending moment diagram, $\psi = 0, \Rightarrow C_1 = 1,77$ — Table E.1

$C_2 = 0$ (no transverse loading)

$$M_{cr} = 1,77 \times \frac{\pi^2 \times 200000 \times 0,850 \times 10^6}{(1,00 \times 2700)^2} \times \left(\left[\left(\frac{1,00}{1,00}\right)^2 \times \frac{5085 \times 10^6}{0,850 \times 10^6} + \frac{(1,00 \times 2700)^2 \times 76900 \times 1,372 \times 10^4}{\pi^2 \times 200000 \times 0,850 \times 10^6}\right]^{0,5}\right)$$

$M_{cr} = 41,9$ kNm

$$\bar{\lambda}_{LT} = \sqrt{\frac{90,69 \times 10^3 \times 240}{41,9 \times 10^6}} = 0,721$$

Using imperfection factor $\alpha_{LT} = 0,34$ for cold formed sections: — Section 6.4.2

$$\varphi_{LT} = 0,5 \times \left(1 + 0,34 \times (0,721 - 0,4) + 0,721^2\right) = 0,814$$

$$\chi_{LT} = \frac{1}{0,814 + \left[0,814^2 - 0,721^2\right]^{0,5}} = 0,839$$

$M_{b,Rd} = 0,839 \times 90,69 \times 10^3 \times 240 \times 10^{-6} / 1,1$

$M_{b,Rd} = 16,60$ kNm $< M_{Ed} = 12,0$ kNm (max moment in unrestrained portion of beam)

$\Rightarrow$ member has adequate resistance to lateral torsional buckling.

Deflection — Section 6.4.6

Load case (serviceability limit state): $\sum_{j\geq 1} G_{k,j} + Q_{k,1} + \sum_{i\geq 1} \psi_{0,i} Q_{k,i}$

As there is only one variable action ($Q_{k,1}$), the last term in the above expression does not need to be considered in this example.

Secant modulus is used for deflection calculations – thus it is necessary to find the maximum stress due to unfactored permanent and variable actions.

The secant modulus $E_S = \left(\frac{E_{S1} + E_{S2}}{2}\right)$ — Eq. 6.52

Where $E_{S,i} = \dfrac{E}{1 + 0{,}002 \dfrac{E}{\sigma_{i,Ed,ser}} \left(\dfrac{\sigma_{i,Ed,ser}}{f_y}\right)^n}$ and $i = 1,2$ — Eq. 6.53

From structural analysis calculations the following were found:

Maximum moment due to permanent actions = 1,90 kNm

Maximum moment due to imposed actions = 6,68 kNm

Total moment due to unfactored actions = 8,58 kNm

Section is Class 4, therefore W_{eff} is used in the calculations for maximum stress in the member.

Assume, conservatively that the stress in the tension and compression flange are approximately equal, i.e. $E_{S1} = E_{S2}$

For austenitic grade 1.4401 stainless steel, $n = 7$ — Table 6.4

Serviceability design stress, $\sigma_{i,Ed,ser} = \dfrac{M_{max}}{W_{eff,y}} = \dfrac{8{,}58 \times 10^6}{90{,}69 \times 10^3} = 94{,}6 \text{ N/mm}^2$

$$E_{S,i} = \frac{200000}{1 + 0{,}002 \times \dfrac{200000}{94{,}6} \times \left(\dfrac{94{,}6}{240}\right)^7} = 198757{,}6 \text{ N/mm}^2$$

Maximum deflection due to patch loading occurs at a distance of approximately 1,9 m from support A.

Deflection at a distance x from support A due to patch load extending a distance a from support A is given by the following formulae:

When $x \geq a$: $\delta = \dfrac{waL^4}{24aE_S I} n^2 \left[2m^3 - 6m^2 + m(4 + n^2) - n^2\right]$ — Steel Designer's Manual (5th Ed)

Where $m = x/L$ and $n = a/L$

When $x = 1{,}9$ m and $a = 1{,}5$ m: $m = 1{,}9/4{,}2 = 0{,}452$; $n = 1{,}5/4{,}2 = 0{,}357$

Patch load (permanent + variable unfactored actions): $w = 11{,}0$ kN/m

Uniform load (permanent action): $w = 0{,}128$ kN/m

Deflection due to patch loads at a distance of 1,9 m from support A, δ_1:

$$\delta_1 = \frac{11000 \times 1{,}5 \times 4200^4}{24 \times 1500 \times 198757{,}6 \times 9{,}06 \times 10^6} \times$$
$$0{,}357^2 \times \left[2 \times 0{,}452^3 - 6 \times 0{,}452^2 + 0{,}452\left(4 + 0{,}357^2\right) - 0{,}357^2\right]$$

$\delta_1 = 7{,}04$ mm

Deflection at midspan due to self weight of beam, δ_2

$$\delta_2 = \frac{5}{384} \times \frac{(w \times L) L^3}{E_S I} = \frac{5}{384} \times \frac{(0{,}128 \times 10^3 \times 4{,}2) \times 4200^3}{198\,757{,}6 \times 9{,}06 \times 10^6} = 0{,}29 \text{ mm}$$

Total deflection $\approx \delta_1 + \delta_2 = 7{,}04 + 0{,}29 = 7{,}33$ mm

$$\delta_{\text{limiting}} = \frac{L}{250} = \frac{4200}{250} = 16{,}8 \text{ mm} > 7{,}33 \text{ mm}$$

$\Rightarrow$ deflection is acceptably small.

(A finite element analysis was carried out on an identical structural arrangement. The total beam deflection at mid-point was 7,307 mm – see deformed beam shape with deflections below.)

DESIGN EXAMPLE 10 – AXIALLY LOADED COLUMN IN FIRE

Design an unprotected cold-formed rectangular hollow section subject to axial load and bending for 30 minutes fire resistance.

The column length is 2,7 m and is subject to axial load from the end reaction of a floor beam at an eccentricity of 90 mm from the narrow face of the column.

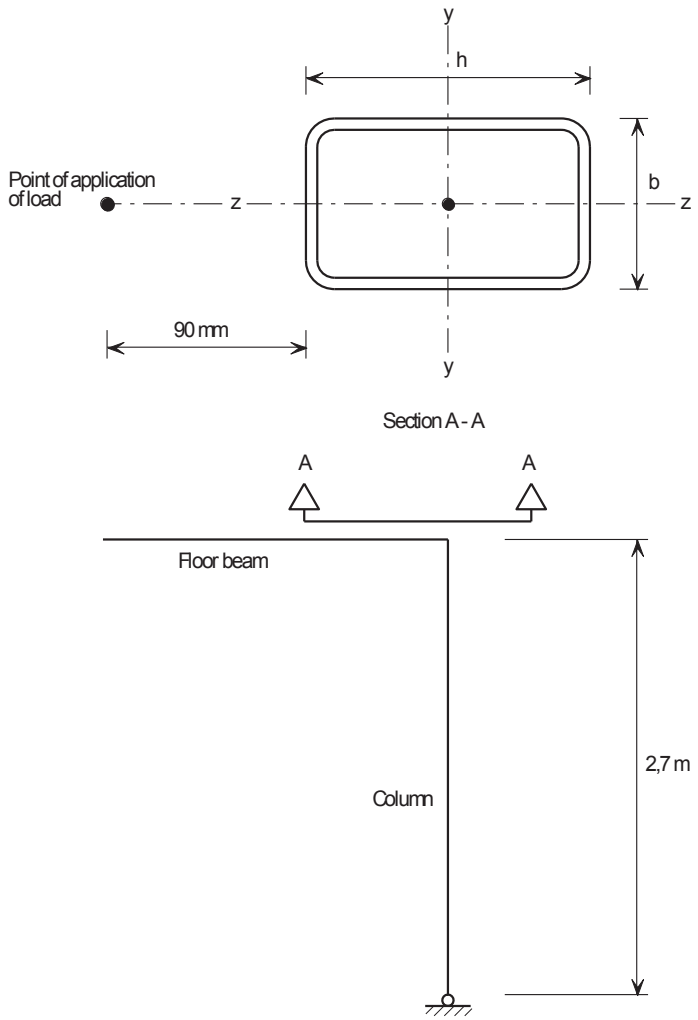

Actions

This eccentricity is taken to be 90 mm + $h/2$, where h is the depth of the section. Thus the beam introduces a bending moment about the column's major axis.

The unfactored actions are: Permanent action: 6 kN
Variable action: 7 kN

The column will initially be checked at the ultimate limit state (LC1) and subsequently at the fire limit state (LC2) for fire duration of 30 minutes. The load cases are as follows:

LC1 (ultimate limit state) $\sum_j \gamma_{G,j} G_{k,j} + \gamma_{Q,1} Q_{k,1}$

$\gamma_{G,j}$ = 1,35 (unfavourable effects)
$\gamma_{Q,1}$ = 1,5

LC2 (fire limit state) $\sum_j \gamma_{GA,j} G_{k,j} + \psi_{1,1} Q_{k,1}$

γ_{GA} = 1,0

Values for $\psi_{1,1}$ are given in EN 1990 and NA for EN 1990, but for this example conservatively assume $\psi_{1,1}$ = 1,0.

Design at the Ultimate Limit State (LC1)

Loading on the corner column due to shear force at end of beam (LC1):

Axial force N_{Ed} = 1,35 × 6 + 1,5 × 7 = 18,6 kN

Try 100×50×6 cold-formed RHS.

Major axis bending moment (due to eccentricity of shear force from centroid of column):

$M_{y,Ed}$ = 18,6 × (0,09 + 0,10/2) = 2,60 kNm

Partial factors

The following partial factors are used throughout the design example for LC1: — Table 4.1

γ_{M0} = 1,10 and γ_{M1} = 1,10

Material properties

Use austenitic grade 1.4401.

f_y = 220 N/mm² and f_u = 530 N/mm² (for hot-rolled strip). — Table 2.2

E = 200000 N/mm² and G = 76900 N/mm² — Section 2.3.1

Cross-section properties – 100 x 50 x 6 mm RHS

$W_{el,y}$	= 32,58 × 10³ mm³	i_y	= 32,9 mm
$W_{pl,y}$	= 43,75 × 10³ mm³	i_z	= 19,1 mm
A	= 1500 mm²	t	= 6,0 mm

Cross-section classification — Section 5.3.2

$$\varepsilon = \left[\frac{235}{f_y}\frac{E}{210000}\right]^{0,5} = \left[\frac{235}{220}\times\frac{200000}{210000}\right]^{0,5} = 1,01$$ — Table 5.2

For a RHS the compression width c may be taken as $h - 3t$. — Table 5.2

For the web, c = 100 – 3 × 6 = 82 mm

Web subject to compression: c/t = 82/6 = 13,7 — Table 5.2

Limit for Class 1 web = 33ε = 33,33 — Table 5.2

33,33 > 13,7 ∴ Web is Class 1

By inspection, if the web is Class 1 subject to compression, then the flange will also be Class 1.

∴ The overall cross-section classification is therefore Class 1 (under pure compression).

Compression resistance of cross-section — Section 5.7.3

$N_{c,Rd} = \dfrac{Af_y}{\gamma_{M0}}$ for Class 1, 2 or 3 cross-sections — Eq. 5.27

$N_{c,Rd} = \dfrac{1500 \times 220}{1,1} = 300$ kN

300 kN > 18,6 kN ∴ acceptable

Bending resistance of cross-section — Section 5.7.4

$M_{c,y,Rd} = \dfrac{W_{pl,y} f_y}{\gamma_{M0}}$ for Class 1, 2 or 3 cross-sections — Eq. 5.29

$M_{c,y,Rd} = \dfrac{43750 \times 220}{1,1} = 8,75$ kNm

8,75 kNm > 2,60 kNm ∴ acceptable

Axial compression and bending resistance of cross-section — Section 5.7.6

$M_{y,Ed} \leq M_{N,Rd}$ — Eq. 5.33

The following approximation for $M_{N,y,Rd}$ may be used for RHS: — EN 1993-1-1, clause 6.2.9.1(5)

$M_{N,y,Rd} = M_{pl,y,Rd}\,(1-n)/(1-0,5a_w)$ but $M_{N,y,Rd} \leq M_{pl,y,Rd}$

Where

$a_w = \dfrac{A-2bt}{A}$ but $a_w \leq 0,5$

$a_w = \dfrac{1500 - 2 \times 50 \times 6}{1500} = 0,6$ but $a_w \leq 0,5$, therefore $a_w = 0,5$

$n = \dfrac{N_{Ed}}{N_{pl,Rd}} = \dfrac{18,6}{300} = 0,062$

$M_{N,y,Rd} = 8,75\left(\dfrac{1-0.062}{1-0,5 \times 0,5}\right) = 10,94 \leq M_{pl,y,Rd} = 8,75$

Therefore $M_{N,y,Rd} = 8,75$ kNm, and $M_{y,Ed} \leq M_{N,Rd}$

Member buckling resistance in compression — Section 6.3.3

$N_{b,Rd} = \dfrac{\chi A f_y}{\gamma_{M1}}$ for Class 1, 2 or 3 cross-sections — Eq. 6.2

$\chi = \dfrac{1}{\phi + \left[\phi^2 - \bar{\lambda}^2\right]^{0,5}} \leq 1$ — Eq. 6.4

where

$\phi = 0,5\left(1 + \alpha\left(\bar{\lambda} - \bar{\lambda}_0\right) + \bar{\lambda}^2\right)$ — Eq. 6.5

$\bar{\lambda} = \dfrac{L_{cr}}{i}\dfrac{1}{\pi}\sqrt{\dfrac{f_y}{E}}$ for Class 1, 2 or 3 cross-sections — Eq. 6.6

L_{cr} = buckling length of column, taken conservatively as 1,0 × column length = 2,7 m

$$\bar{\lambda}_y = \frac{2700}{32,9} \times \frac{1}{\pi} \times \sqrt{\frac{220}{200000}} = 0,866$$

$$\bar{\lambda}_z = \frac{2700}{19,1} \times \frac{1}{\pi} \times \sqrt{\frac{220}{200000}} = 1,492$$

Buckling curves: major (y-y) axis:

For cold-formed austenitic stainless steel hollow sections subject to flexural buckling, α = 0,49 and $\bar{\lambda}_0$ = 0,30. Table 6.1

$$\phi = 0,5 \times \left(1 + 0,49 \times (0,866 - 0,3) + 0,866^2\right) = 1,014$$

$$\chi_y = \frac{1}{1,014 + \left[1,014^2 - 0,866^2\right]^{0,5}} = 0,649$$

$$N_{b,y,Rd} = \frac{0,649 \times 1500 \times 220}{1,10} = 194,70 \text{ kN}$$

194,70 kN > 18,6 kN ∴ acceptable

Buckling curves: minor (z-z) axis:

$$\phi = 0,5 \times \left(1 + 0,49 \times (1,492 - 0,3) + 1,492^2\right) = 1,905$$

$$\chi_z = \frac{1}{1,905 + \left[1,905^2 - 1,492^2\right]^{0,5}} = 0,324$$

$$N_{b,z,Rd} = \frac{0,324 \times 1500 \times 220}{1,10} = 97,20 \text{ kN}$$

97,20 kN > 18,6 kN ∴ acceptable

(Resistance to torsional buckling will not be critical for a rectangular hollow section with a h/b ratio of 2.) Section 6.3.1

Member buckling resistance in combined bending and axial compression Section 6.5.2

$$\frac{N_{Ed}}{(N_{b,Rd})_{min}} + k_y \left(\frac{M_{y,Ed} + N_{Ed} e_{Ny}}{\beta_{W,y} W_{pl,y} f_y / \gamma_{M1}} \right) \leq 1$$ Eq. 6.56

$\beta_{W,y} = 1,0$ for Class 1 cross-sections

$$k_y = 1,0 + D_1 \left(\bar{\lambda}_y - D_2\right) \frac{N_{Ed}}{N_{b,Rd,y}} \leq 1 + D_1 \left(D_3 - D_2\right) \frac{N_{Ed}}{N_{b,Rd,y}}$$ Eq. 6.63

From Table 6.6, D_1 = 2,0 and D_2 = 0,3 and D_3 = 1,3 Table 6.6

$$k_y = 1,0 + 2 \times (0,866 - 0,3) \times \frac{18,6}{194,7} = 1,108 < 1 + 2 \times (1,3 - 0,3) \times \frac{18,6}{194,7} = 1,191$$

∴ k_y = 1.108

$$\frac{18,6}{97,20} + 1,108 \times \left(\frac{2,60 \times 10^6 + 0}{1,0 \times 43,75 \times 10^3 \times 220 / 1,10} \right) = 0,521 < 1 \therefore \text{ acceptable}$$

Design at the Fire Limit State (LC2)

For LC2, the column is designed for the following axial loads and moments.

Axial compressive force $N_{fi,Ed}$ = 1,0 × 6 + 1,0 × 7 = 13,0 kN

Maximum bending moment $M_{y,fi,Ed}$ = 13,0 × (0,09 + 0,05) = 1,82 kNm

Determine temperature in steel after 30 minutes fire duration — Section 8.4.4

Assume that the section is unprotected and that there is a uniform temperature distribution within the steel section. The increase in temperature during time interval Δt is found from:

$$\Delta\theta_t = \frac{A_m/V}{c\,\rho}\dot{h}_{net,d}\Delta t$$ — Eq. 8.41

$$\dot{h}_{net,d} = \dot{h}_{net,c} + \dot{h}_{net,r}$$ — Eq. 8.42

$$\dot{h}_{net,c} = \alpha_c\left(\theta_g - \theta\right)$$ — Eq. 8.43

$$\dot{h}_{net,r} = \phi\varepsilon_{res}5{,}67\times10^{-8}\left[\left(\theta_g+273\right)^4 - \left(\theta+273\right)^4\right]$$ — Eq. 8.44

where:

θ_g = gas temperature of the environment of the member in fire exposure, given by the nominal temperature time curve:

$\theta_g = 20 + 345\log_{10}(8t + 1)$ — Eq. 8.45

θ = surface temperature of the member

Initial input values for determination of final steel temperature are as follows:

A_m/V = 200 m^{-1}

α_c = 25 W/m^{2}K — Section 8.4.4

Initial steel temperature: θ = 20 °C

Resultant emissivity: ε_{res} = 0,4 — Section 8.4.4

Density of stainless steel: ρ = 8000 kg/m^3 for austenitic grade 1.4401 — Table 2.7

Configuration factor: φ = 1,0 — EN 1991-1-2 cl. 3.1(7)

The specific heat is temperature-dependent and is given by the following expression:

$c = 450 + 0{,}28\theta - 2{,}91\times10^{-4}\theta^2 + 1{,}34\times10^{-7}\theta^3$ J/kgK — Eq. 8.37

Δt = 2 seconds

The above formulae and initial input information were coded in an Excel spreadsheet and the following steel temperature, after a fire duration of 30 minutes, was obtained.

θ = 829 °C

Reduction of mechanical properties at elevated temperature

The following reduction factors are required for calculation of resistance at elevated temperatures. — Section 8.2

Young's modulus reduction factor: $k_{E,\theta} = E_\theta/E$ — Eq. 8.4

0,2% proof strength reduction factor: $k_{p0,2,\theta} = f_{p0,2,\theta}/f_y$ — Eq. 8.1

Strength at 2% total strain reduction factor: $k_{2,\theta} = f_{2,\theta}/f_y$ but $f_{2,\theta} \le f_{u,\theta}$ — Eq. 8.2

The values for the reduction factors at 829 °C are obtained by linear interpolation:

$k_{E,\theta}$ = 0,578 — Table 8.1

$k_{p0,2,\theta}$ = 0,355 — Table 8.1

$k_{2,\theta}$ = 0,430

$k_{u,\theta}$ = 0,297

$f_{2,\theta}$ = 0,430 × 220 = 94,6 and $f_{u,\theta}$ = 0,297 × 530 = 157, therefore $f_{2,\theta} \leq f_{u,\theta}$

Partial factor — Section 8.1

$\gamma_{M,fi} = 1,0$

Cross-section classification — Section 8.3.2

Under compression, $k_{y,\theta}$ should be based on $f_{p0,2,\theta}$, i.e. $k_{y,\theta} = k_{p0,2,\theta}$ — Section 8.2

$$\varepsilon_\theta = \varepsilon\left[\frac{k_{E,\theta}}{k_{y,\theta}}\right]^{0,5} = 1,01\times\left[\frac{0,578}{0,355}\right]^{0,5} = 1,29$$ — Eq. 8.6

Web subject to compression: c/t = 82/6 = 13,7

Limit for Class 1 web = 33 ε_θ = 42,57

42,57 > 13,7 ∴ Web is Class 1

∴ The overall cross-section classification is Class 1 (under pure compression).

Member buckling resistance in compression

$$N_{b,fi,t,Rd} = \frac{\chi_{fi}\, A\, k_{p0,2,\theta} f_y}{\gamma_{M,fi}}$$ for Class 1, 2 and 3 cross-sections — Eq. 8.10

$$\chi_{fi} = \frac{1}{\phi_\theta + \left[\phi_\theta^2 - \bar{\lambda}_\theta^2\right]^{0,5}} \leq 1$$ — Eq. 8.12

where

$$\phi_\theta = 0,5\left(1 + \alpha\left(\bar{\lambda}_\theta - \bar{\lambda}_0\right) + \bar{\lambda}_\theta^2\right)$$ — Eq. 8.13

$$\bar{\lambda}_\theta = \bar{\lambda}\left[\frac{k_{p0,2,\theta}}{k_{E,\theta}}\right]^{0,5}$$ for all classes of cross-section — Eq. 8.14

$$\bar{\lambda}_{y,\theta} = 0,866\left[\frac{0,355}{0,578}\right]^{0,5} = 0,679$$

$$\bar{\lambda}_{z,\theta} = 1,492\left[\frac{0,355}{0,578}\right]^{0,5} = 1,169$$

Buckling curves: major (y-y) axis:

For cold-formed austenitic stainless steel hollow sections subject to flexural buckling, α = 0,49 and $\bar{\lambda}_0$ = 0,30. — Table 6.1

$$\phi_{\theta,y} = 0,5\times\left(1 + 0,49\times\left(0,679 - 0,3\right) + 0,679^2\right) = 0,823$$

$$\chi_{fi,y} = \frac{1}{0,823 + \left[0,823^2 - 0,679^2\right]^{0,5}} = 0,776$$

$$N_{b,y,fi,t,Rd} = \frac{0,776\times 0,355\times 1500\times 220}{1,0} = 90,91 \text{ kN}$$

90,91 kN > 13,0 kN ∴ acceptable

Buckling curves: minor (z-z) axis:

$$\phi_{\theta,z} = 0,5\times\left(1+0,49\times\left(1,169-0,3\right)+1,169^2\right) = 1,396$$

$$\chi_{fi,z} = \frac{1}{1,396+\left[1,396^2-1,169^2\right]^{0,5}} = 0,463$$

$$N_{b,z,fi,t,Rd} = \frac{0,463\times0,355\times1500\times220}{1,0} = 54,24 \text{ kN}$$

54,24 kN > 18,6 kN ∴ acceptable

Member buckling resistance in combined bending and axial compression

$$\frac{N_{fi,Ed}}{\chi_{min,fi}\,A\,k_{p0,2,\theta}\dfrac{f_y}{\gamma_{M,fi}}} + \frac{k_y M_{y,fi,Ed}}{M_{y,fi,\theta,Rd}} + \frac{k_z M_{z,fi,Ed}}{M_{z,fi,\theta,Rd}} \le 1$$ Eq. 8.26

Where

$$k_y = 1-\frac{\mu_y N_{fi,Ed}}{\chi_{y,fi}\,A\,k_{p0,2,\theta}\dfrac{f_y}{\gamma_{M,fi}}} \le 3$$ Eq. 8.30

$$\mu_y = \left(1,2\beta_{M,y}-3\right)\bar{\lambda}_{y,\theta}+0,44\beta_{M,y}-0,29 \le 0,8$$ Eq. 8.31

Assuming the column is pinned at the base, a triangular bending moment distribution occurs and $\beta_M = 1,8$: Table 8.3

$$\mu_y = (1,2\times1,8-3)\times0,679+0,44\times1,8-0,29$$

$$= -0,068$$

$$k_y = 1-\frac{(-0,068)\times13,0\times10^3}{0,776\times1500\times0,355\times\dfrac{220}{1,0}} = 1,010 < 3,0$$

$$M_{y,fi,\theta,Rd} = k_{2,\theta}M_{Rd}\left(\frac{\gamma_{M0}}{\gamma_{M,fi}}\right)$$ for Class 1, 2 or 3 sections Eq. 8.15

$$M_{y,fi,\theta,Rd} = 0,430\times8,75\times\left(\frac{1,10}{1,0}\right) = 4,14 \text{ kNm}$$

$$\frac{13,0}{0,463\times1500\times0,355\times\dfrac{220}{1,0}} + \frac{1,010\times1,82}{4,14} = 0,444 \le 1$$ Eq. 8.26

Therefore the section has adequate resistance after 30 minutes in a fire.

DESIGN EXAMPLE 11 – DESIGN OF A TWO-SPAN COLD-WORKED TRAPEZOIDAL ROOF SHEETING

This example deals with a two-span trapezoidal roof sheeting with a thickness of 0,6 mm from stainless steel austenitic grade 1.4401 CP500, i.e. cold worked with f_y = 460 N/mm^2. Comparisons will be made against the design of identical sheeting of ferritic grade 1.4003 in the annealed condition, i.e. f_y = 280 N/mm^2 (see Design Example 3). (There are no differences in the design procedure for ferritic and austenitic sheeting.)

The dimensions of the roof sheeting are shown below.

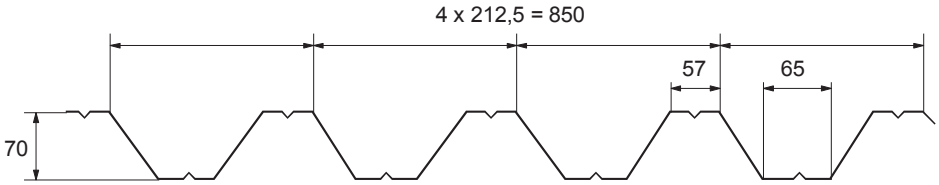

The example shows the following design tasks:
- determination of effective section properties at the ultimate limit state;
- determination of the bending resistance of the section;
- determination of the resistance at the intermediate support;
- determination of deflections at serviceability limit state.

Design data

Spans	L	=	3500 mm	
Width of supports	s_s	=	100 mm	
Design load	Q	=	1,4 kN/m^2	
Self-weight	G	=	0,07 kN/m^2	
Design thickness	t	=	0,6 mm	
Yield strength	f_y	=	460 N/mm^2	Table 2.3
Modulus of elasticity	E	=	200000 N/mm^2	Section 2.3.1
Partial safety factor	γ_{M0}	=	1,1	Table 4.1
Partial safety factor	γ_{M1}	=	1,1	Table 4.1
Load factor	γ_G	=	1,35	Section 4.3
Load factor	γ_Q	=	1,5	Section 4.3

A detailed sketch of the roof sheeting is given in the figure below. The upper flange will be in compression over the mid support and therefore this case will be checked in this example.

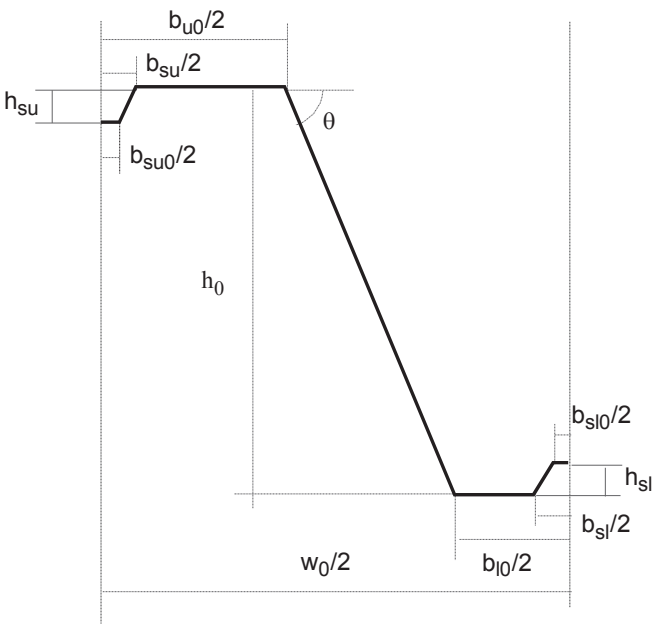

Mid line dimensions:

$h_0 = 70$ mm
$w_0 = 212{,}5$ mm
$b_{u0} = 65$ mm
$b_{l0} = 57$ mm
$b_{su} = 20$ mm
$b_{su0} = 8$ mm
$h_{su} = 6$ mm
$b_{sl} = 20$ mm
$b_{s10} = 8$ mm
$h_{sl} = 6$ mm

$r = 2$ mm (internal radius of the corners)

Angle of the web:

$$\theta = \text{atan}\left|\frac{h_0}{0{,}5(w_0 - b_{u0} - b_{l0})}\right| = \text{atan}\left|\frac{70}{0{,}5 \times (212{,}5 - 65 - 57)}\right| = 57{,}1°$$

Effective section properties at the ultimate limit state (ULS) — Section 5.2

Check on maximum width to the thickness ratios and angle of web:

$h_0/t = 70/0{,}6 = 117 \leq 400\sin\theta = 336$ — Table 5.1

Angle of the web and corner radius:
$\max(b_{l0}/t\,;\, b_{u0}/t) = b_{u0}/t = 65/0{,}6 = 108 \leq 400$ — Table 5.1

$45° \leq \theta = 57{,}1° \leq 90°$

$$b_p = \frac{b_{u0} - b_{su}}{2} = \frac{65 - 20}{2} = 22{,}5 \text{ mm}$$

The influence of rounded corners on cross-section resistance may be neglected if the internal radius $r \leq 5t$ and $r \leq 0{,}10 b_p$

$r = 2\text{mm} \leq \min(5t\,;\, 0{,}1 b_p) = \min(5 \times 0{,}6\,;\, 0{,}1 \times 22{,}5) = 2{,}25$ mm — Section 5.6.2

The influence of rounded corners on cross-section resistance may be neglected.

Location of the centroidal axis when the web is fully effective

Calculate reduction factor ρ for effective width of the compressed flange:

$$\rho = \frac{0{,}772}{\bar{\lambda}_p} - \frac{0{,}079}{\bar{\lambda}_p^2} \text{ but } \leq 1$$ — Section 5.4.1 Eq. 5.1

where

$$\bar{\lambda}_p = \frac{\bar{b}/t}{28{,}4\varepsilon\sqrt{k_\sigma}} = \frac{22{,}5/0{,}6}{28{,}4 \times 0{,}698 \times \sqrt{4}} = 0{,}946$$ — Eq. 5.3

$\psi = 1 \Rightarrow k_\sigma = 4$ — Table 5.3

$$\bar{b} = b_p = \frac{b_{u0} - b_{su}}{2} = \frac{65 - 20}{2} = 22{,}5 \text{ mm}$$

$$\varepsilon = \left[\frac{235}{f_y}\frac{E}{210\,000}\right]^{0,5} = \left[\frac{235}{460}\times\frac{200\,000}{210\,000}\right]^{0,5} = 0{,}698$$ Table 5.2

$$\rho = \frac{0{,}772}{\bar{\lambda}_p} - \frac{0{,}079}{\bar{\lambda}_p^2} = \frac{0{,}772}{0{,}946} - \frac{0{,}079}{0{,}946^2} = 0{,}728 \le 1$$

$$b_{\text{eff,u}} = \rho\bar{b} = 0{,}728 \times 22{,}5 = 16{,}38 \text{ mm}$$ Table 5.3

Effective stiffener properties

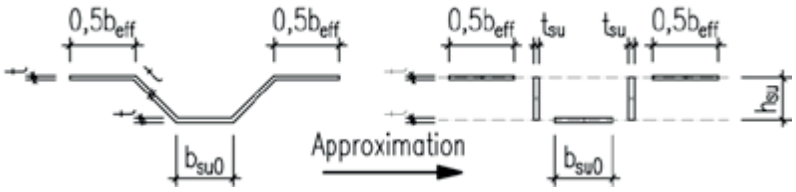

$$t_{su} = \frac{\sqrt{h_{su}^{\ 2} + \left(\frac{b_{su} - b_{su0}}{2}\right)^2}}{h_{su}}t = \frac{\sqrt{6^2 + \left(\frac{20-8}{2}\right)^2}}{6} \times 0{,}6 = 0{,}849 \text{ mm}$$

$$A_s = (b_{\text{eff,u}} + b_{su0})t + 2h_{su}t_{su} = (16{,}38 + 8) \times 0{,}6 + 2 \times 6 \times 0{,}849 = 24{,}82 \text{ mm}^2$$ Fig. 5.3

$$e_s = \frac{b_{su0}h_{su}t + 2h_{su}\frac{h_{su}}{2}t_{su}}{A_s} = \frac{8 \times 6 \times 0{,}6 + 2 \times 6 \times \frac{6}{2} \times 0{,}849}{24{,}82} = 2{,}39 \text{ mm}$$

$$I_s = 2(15t^2e_s^{\ 2}) + b_{su0}t\,(h_{su} - e_s)^2 + 2h_{su}t_{su}\left(\frac{h_{su}}{2} - e_s\right)^2 + 2\left(\frac{15t^4}{12}\right) + \frac{b_{su0}t^3}{12} + 2\frac{t_{su}h_{su}^{\ 3}}{12}$$

$$I_s = 2 \times (15 \times 0{,}6^2 \times 2{,}39^2) + 8 \times 0{,}6 \times (6 - 2.39)^2 + 2 \times 6 \times 0{,}849 \times \left(\frac{6}{2} - 2{,}39\right)^2 + 2 \times \left(\frac{15 \times 0{,}6^4}{12}\right) + \frac{8 \times 0{,}6^3}{12} + 2 \times \frac{0{,}849 \times 6^3}{12} = 159{,}07 \text{ mm}^4$$ Fig. 5.3

$$b_s = 2\sqrt{h_{su}^{\ 2} + \left(\frac{b_{su} - b_{su0}}{2}\right)^2} + b_{su0} = 2 \times \sqrt{6^2 + \left(\frac{20-8}{2}\right)^2} + 8 = 25{,}0 \text{ mm}$$

$$l_b = 3{,}07\left[I_s b_p^{\ 2}\left(\frac{2b_p + 3b_s}{t^3}\right)\right]^{1/4} = 3{,}07 \times \left[159{,}07 \times 22{,}5^2 \times \left(\frac{2 \times 22{,}5 + 3 \times 25}{0{,}6^3}\right)\right]^{1/4} = 251 \text{ mm}$$ Eq. 5.10

$$s_w = \sqrt{\left(\frac{w_0 - b_{u0} - b_{l0}}{2}\right)^2 + h_0^{\ 2}} = \sqrt{\left(\frac{212{,}5 - 65 - 57}{2}\right)^2 + 70^2} = 83{,}4 \text{ mm}$$ Fig. 5.5

$$b_d = 2b_p + b_s = 2 \times 22{,}5 + 25 = 70 \text{ mm}$$

$$k_{w0} = \sqrt{\frac{s_w + 2b_d}{s_w + 0{,}5b_d}} = \sqrt{\frac{83{,}4 + 2 \times 70}{83{,}4 + 0{,}5 \times 70}} = 1{,}37$$ Eq. 5.11

$$\frac{l_b}{s_w} = \frac{251}{83{,}4} = 3{,}01 \ge 2 \quad \Rightarrow \quad k_w = k_{w0} = 1{,}37$$ Eq. 5.8

$$\sigma_{\mathrm{cr,s}} = \frac{4{,}2k_{\mathrm{w}}E}{A_{\mathrm{s}}}\sqrt{\frac{I_{\mathrm{s}}t^3}{4{b_{\mathrm{p}}}^2(2b_{\mathrm{p}}+3b_{\mathrm{s}})}}$$ Eq. 5.4

$$\sigma_{\mathrm{cr,s}} = \frac{4{,}2\times 1{,}37\times 200\times 10^3}{24{,}82}\times\sqrt{\frac{159{,}07\times 0{,}6^3}{4\times 22{,}5^2\times(2\times 22{,}5+3\times 25)}} = 551{,}3\ \mathrm{N/mm^2}$$

$$\bar{\lambda}_{\mathrm{d}} = \sqrt{\frac{f_{\mathrm{y}}}{\sigma_{\mathrm{cr,s}}}} = \sqrt{\frac{460}{551{,}3}} = 0{,}913$$

$0{,}65 < \bar{\lambda}_{\mathrm{d}} = 0{,}913 < 1{,}38 \Rightarrow$ Eq. 5.17

$\chi_{\mathrm{d}} = 1{,}47 - 0{,}723\bar{\lambda}_{\mathrm{d}} = 1{,}47 - 0{,}723\times 0{,}913 = 0{,}81$

$t_{\mathrm{red,u}} = \chi_{\mathrm{d}}\, t = 0{,}81\times 0{,}6 = 0{,}486$ mm

The distance of neutral axis from the compressed flange:

$$t_{\mathrm{sl}} = \frac{\sqrt{{h_{\mathrm{sl}}}^2+\left(\frac{b_{\mathrm{sl}}-b_{sl0}}{2}\right)^2}}{h_{\mathrm{sl}}}\,t = \frac{\sqrt{6^2+\left(\frac{20-8}{2}\right)^2}}{6}\times 0{,}6 = 0{,}849\ \mathrm{mm}$$

$t_{\mathrm{w}} = t/\sin\theta = 0{,}6/\sin(57{,}1°) = 0{,}714$ mm

e_i [mm]	A_i [mm^2]
0	$0{,}5b_{\mathrm{eff,u}}\, t = 4{,}9$
0	$0{,}5b_{\mathrm{eff,u}}\, \chi_d\, t = 3{,}98$
$0{,}5h_{\mathrm{su}} = 3$	$h_{\mathrm{su}}\, \chi_d t_{\mathrm{su}} = 4{,}13$
$h_{\mathrm{su}} = 6$	$0{,}5b_{\mathrm{su0}}\, \chi_d\, t = 1{,}94$
$0{,}5h_0 = 35$	$h_0 t_{\mathrm{w}} = 49{,}98$
$h_0 = 70$	$0{,}5(b_{l0}-b_{sl})\, t = 11{,}1$
$h_0 - 0{,}5h_{sl} = 67$	$h_{sl}t_{sl} = 5{,}09$
$h_0 - h_{sl} = 64$	$0{,}5b_{sl0}t = 2{,}4$

$$A_{\mathrm{tot}} = \sum A_i = 83{,}52\ \mathrm{mm^2}$$

$$e_{\mathrm{c}} = \frac{\sum A_i e_i}{A_{\mathrm{tot}}} = 36{,}46\ \mathrm{mm}$$

Effective cross-section of the compression zone of the web

$$s_{\mathrm{eff,1}} = s_{\mathrm{eff,0}} = 0{,}76t\sqrt{\frac{E}{\gamma_{\mathrm{M0}}\sigma_{\mathrm{com,Ed}}}} = 0{,}76\times 0{,}6\times\sqrt{\frac{200}{1{,}1\times 460\times 10^{-3}}}$$ EN 1993-1-3 5.5.3.4.3(4-5)

$= 9{,}07$ mm

$s_{\mathrm{eff,n}} = 1{,}5s_{\mathrm{eff,0}} = 1{,}5\times 9{,}07 = 13{,}61$ mm

Effective cross-section properties per half corrugation

$h_{\mathrm{eff,1}} = s_{\mathrm{eff,1}}\sin\theta = 9{,}07\times\sin(57{,}1°) = 7{,}62$ mm

$h_{\mathrm{eff},n} = s_{\mathrm{eff},n}\sin\theta = 13{,}61\times\sin(57{,}1°) = 11{,}43$ mm

$e_{\mathrm{eff},i}$ [mm]	$A_{\mathrm{eff},i}$[mm^2]	$I_{\mathrm{eff},i}$[mm^4]
0	$0{,}5b_{\mathrm{eff,u}}t = 4{,}9$	≈ 0
0	$0{,}5b_{\mathrm{eff,u}}\,\chi_d\,t = 4{,}0$	≈ 0
$0{,}5h_{\mathrm{su}} = 3$	$h_{\mathrm{su}}\,\chi_d\,t_{\mathrm{su}} = 4{,}1$	$\chi_d t_{\mathrm{su}} {h_{\mathrm{su}}}^3/12 = 12{,}4$
$h_{\mathrm{su}} = 6$	$0{,}5b_{\mathrm{su0}}\,\chi_d\,t = 1{,}9$	≈ 0
$0{,}5h_{\mathrm{eff},1} = 3{,}8$	$h_{\mathrm{eff},1}t_{\mathrm{w}} = 5{,}4$	$t_{\mathrm{w}}{h_{\mathrm{eff},1}}^3/12 = 26{,}3$
$h_0 - 0{,}5(h_0 - e_{\mathrm{c}} + h_{\mathrm{eff},n}) = 47{,}5$	$(h_0 - e_{\mathrm{c}} + h_{\mathrm{eff},n})\,t_w = = 32{,}1$	$t_{\mathrm{w}}\dfrac{(h_0 - e_{\mathrm{c}} + h_{\mathrm{eff},n})^3}{12} = 5411{,}1$
$h_0 = 70$	$0{,}5(b_{l0} - b_{sl})\,t = 11{,}1$	≈ 0
$h_0 - 0{,}5h_{\mathrm{sl}} = 67$	$h_{\mathrm{sl}}t_{\mathrm{sl}} = 5{,}1$	$t_{\mathrm{sl}}{h_{\mathrm{sl}}}^3/12 = 15{,}3$
$h_0 - h_{\mathrm{sl}} = 64$	$0{,}5b_{\mathrm{sl0}}t = 2{,}4$	≈ 0

$A_{\mathrm{tot}} = \sum A_{\mathrm{eff,i}} = 71{,}0\ \mathrm{mm}^2$

$$e_{\mathrm{c}} = \frac{\sum A_{\mathrm{eff,i}}\,e_{\mathrm{eff,i}}}{A_{\mathrm{tot}}} = 40{,}0\ \mathrm{mm}$$

$$I_{\mathrm{tot}} = \sum I_{\mathrm{eff,i}} + \sum A_{\mathrm{eff,i}}(e_{\mathrm{c}} - \mathrm{e}_{\mathrm{eff,i}})^2 = 5\,465{,}1 + 46\,021{,}6 = 51\,486{,}7\ \mathrm{mm}^2$$

Optionally the effective section properties may also be redefined iteratively based on the location of the effective centroidal axis. — EN 1993-1-3

Bending strength per unit width (1 m)

$$I = \frac{1000}{0{,}5\mathrm{w}_0}I_{\mathrm{tot}} = \frac{1000}{0{,}5 \times 212{,}5} \times 51\,486{,}7 = 484\,580{,}7\ \mathrm{mm}^4$$

$$W_{\mathrm{u}} = \frac{I}{e_{\mathrm{c}}} = \frac{484\,580{,}7}{40} = 12\,114{,}5\ \mathrm{mm}^3$$

$$W_{\mathrm{l}} = \frac{I}{h_0 - e_{\mathrm{c}}} = \frac{484\,580{,}7}{70 - 40} = 16\,152{,}7\ \mathrm{mm}^3$$

Because $W_{\mathrm{u}} < W_{\mathrm{l}} \Rightarrow W_{\mathrm{eff,min}} = W_u = 12\,114{,}5\ \mathrm{mm}^3$

$$M_{\mathrm{c,Rd}} = \frac{W_{\mathrm{eff,min}}f_{\mathrm{y}}}{\gamma_{\mathrm{M0}}} = 12114{,}5 \times 460 \times \frac{10^{-6}}{1{,}1} = 5{,}07\ \mathrm{kNm}$$ — Eq. 5.31

Determination of the resistance at the intermediate support — Section 6.4.4

Web crippling strength

$c \geq 40$ mm — EN 1993-1-3

$r/t = 2/0{,}6 = 3{,}33 \leq 10$ — Clause 6.1.7

$h_w/t = 70/0{,}6 = 117 \leq 200\sin\theta = 200\sin(57{,}1°) = 168$

$45° \leq \theta = 57{,}1° \leq 90°$

$\beta_{\mathrm{V}} = 0 \leq 0{,}2 \Rightarrow l_a = s_s = 100$ mm

$\alpha = 0{,}15$ (category 2)

$$R_{\mathrm{w,Rd}} = \alpha\, t^2 \sqrt{f_{\mathrm{y}} E}\left(1 - 0{,}1\sqrt{\frac{r}{t}}\right)\left(0{,}5 + \sqrt{0{,}02\frac{l_{\mathrm{a}}}{t}}\right)\left[2{,}4 + \left(\frac{\varphi}{90}\right)^2\right]\frac{1}{\gamma_{\mathrm{M1}}}\,\frac{1000}{0{,}5\mathrm{w}_0}$$

EN 1993-1-3 Eq. 6.18

$$R_{\mathrm{w,Rd}} = 0{,}15 \times\ 0{,}6^2\sqrt{460 \times 200\,000} \times \left(1 - 0{,}1\sqrt{\frac{2}{0{,}6}}\right)\left(0{,}5 + \sqrt{0{,}02 \times \frac{100}{0{,}6}}\right) \times$$

$$\times \left[2{,}4 + \left(\frac{57{,}1}{90}\right)^2\right] \times \frac{1}{1{,}1} \times \frac{1000}{0{,}5 \times 212{,}5} \times 10^{-3} = 23{,}6\ \mathrm{kN}$$

Combined bending moment and support reaction

Factored actions per unit width (1 m):

$$q = \gamma_{\mathrm{G}} G + \gamma_{\mathrm{Q}} Q\ =\ 1{,}35 \times 0{,}07 + 1{,}5 \times 1{,}4 =\ 2{,}19\ \mathrm{kN/m}$$

$$M_{\mathrm{Ed}} =\ \frac{qL^2}{8}\ = \frac{2{,}19 \times 3{,}5^2}{8}\ =\ 3{,}35\ \mathrm{kNm}$$

$$F_{\mathrm{Ed}}\ =\ \frac{5}{4}qL\ =\ \frac{5}{4} \times 2{,}19 \times 3{,}5 =\ 9{,}58\ \mathrm{kN}$$

$$\frac{M_{\mathrm{Ed}}}{M_{\mathrm{c,Rd}}}\ =\ \frac{3{,}35}{5{,}07}\ =\ 0{,}661 \le 1{,}0 \qquad \frac{F_{\mathrm{Ed}}}{R_{\mathrm{w,Rd}}}\ =\ \frac{9{,}58}{23{,}6}\ = 0{,}406 \le 1{,}0$$

$$\frac{M_{\mathrm{Ed}}}{M_{\mathrm{c,Rd}}} + \frac{F_{\mathrm{Ed}}}{R_{\mathrm{w,Rd}}}\ = 0{,}661 + 0{,}406\ =\ 1{,}067 \le 1{,}25$$

EN 1993-1-3 Eq. 6.28a - c

Cross-section resistance satisfies the conditions.

Determination of deflections at serviceability limit state (SLS)

Effective cross-section properties

For serviceability verification the effective width of compression elements should be based on the compressive stress in the element under the serviceability limit state loading.

EN 1993-1-3 Clause 5.5.1

Maximum compressive stress in the effective section at SLS. A conservative approximation is made based on W_{u} determined above for ultimate limit state.

$$M_{\mathrm{y,Ed,ser}} =\ \frac{(G+Q)L^2}{8}\ =\ \frac{(0{,}07 + 1{,}4) \times 3{,}5^2}{8} =\ 2{,}25\ \mathrm{kNm}$$

$$\sigma_{\mathrm{com,Ed,ser}} =\ \frac{M_{\mathrm{y,Ed,ser}}}{W_u}\ =\ \frac{2{,}25 \times 10^6}{12114{,}5}\ =\ 185{,}7\ \mathrm{N/mm^2}$$

The effective section properties are determined as before in ultimate limit state except that f_{y} is replaced by $\sigma_{\mathrm{com,Ed,ser}}$ and the thickness of the flange stiffener is not reduced. The results of the calculation are:

Effective width of the compressed flange:	The flange is fully effective.
Location of the centroidal axis when the web is fully effective:	$e_{\mathrm{c}} = 34{,}1$ mm
Effective cross-section of the compression zone of the web:	The web is fully effective.
Effective part of the web:	$s_{\mathrm{eff,1}} = 14{,}268$ mm $s_{\mathrm{eff,n}} = 21{,}4$ mm
Effective cross-section properties per half corrugation:	A_{tot} = 82,44 mm² e_{c} = 36,25 mm I_{tot} = 59726,1 mm⁴

Effective section properties per unit width (1 m):

I = 562128,0 mm^4
W_u = 15507,0 mm^4
W_l = 16655,6 mm^4

Determination of deflection

Secant modulus of elasticity corresponding to maximum value of the bending moment:

$$\sigma_{1,\mathrm{Ed,ser}} = \frac{M_{\mathrm{y,Ed,ser}}}{W_{\mathrm{u}}} = \frac{2{,}25 \times 10^6}{15\,507} = 145{,}096 \text{ N/mm}^2$$

$$\sigma_{2,\mathrm{Ed,ser}} = \frac{M_{\mathrm{y,Ed,ser}}}{W_{\mathrm{l}}} = \frac{2{,}25 \times 10^6}{16\,655{,}6} = 135{,}090 \text{ N/mm}^2$$

$n = 7$ (for austenitic grade 1.4401 stainless steel) — Table 6.4

$$E_{\mathrm{S},1} = \frac{E}{1 + 0{,}002\dfrac{E}{\sigma_{1,\mathrm{Ed,ser}}}\left(\dfrac{\sigma_{1,\mathrm{Ed,ser}}}{f_{\mathrm{y}}}\right)^n} = \frac{200}{1 + 0{,}002 \times \dfrac{200}{0{,}145}\left(\dfrac{0{,}145}{0{,}460}\right)^7} = 199{,}83 \text{ kN/mm}^2$$ — Eq. 6.53

$$E_{\mathrm{S},2} = \frac{E}{1 + 0{,}002\dfrac{E}{\sigma_{2,\mathrm{Ed,ser}}}\left(\dfrac{\sigma_{2,\mathrm{Ed,ser}}}{f_{\mathrm{y}}}\right)^n} = \frac{200}{1 + 0{,}002 \times \dfrac{200}{0{,}135}\left(\dfrac{0{,}135}{0{,}460}\right)^7} = 199{,}89 \text{ kN/mm}^2$$ — Eq. 6.53

$$E_{\mathrm{S}} = \frac{E_{\mathrm{S},1} + E_{\mathrm{S},2}}{2} = \frac{199{,}83 + 199{,}89}{2} = 199{,}86 \text{ kN/mm}^2$$ — Eq. 6.52

Check of deflection

As a conservative simplification, the variation of $E_{\mathrm{s,ser}}$ along the length of the member is neglected.

For cross-section stiffness properties the influence of rounded corners should be taken into account. The influence is considered by the following approximation:

$$\delta = 0{,}43\,\frac{\sum_{j=1}^{n} r_{\mathrm{j}}\dfrac{\varphi_{\mathrm{j}}}{90^{\mathrm{o}}}}{\sum_{i=1}^{m} b_{\mathrm{p,i}}} = 0{,}43\,\frac{2 \times \dfrac{294{,}2^{\mathrm{o}}}{90^{\mathrm{o}}}}{149{,}3} = 0{,}019$$ — Eq. 5.22

$$I_{\mathrm{y,r}} = I\,(1 - 2\delta) = 562128{,}0\,(1 - 2 \times 0{,}019) = 540767{,}1 \text{ mm}^4$$ — Eq. 5.20

For the location of maximum deflection:

$$x = \frac{1 + \sqrt{33}}{16} \times L = \frac{1 + \sqrt{33}}{16} \times 3{,}5 = 1{,}48 \text{ m}$$

$$\delta = \frac{(G + Q)L^4}{48 E_{\mathrm{S}} I_{\mathrm{y,r}}}\left(\frac{x}{L} - 3\frac{x^3}{L^3} + 2\frac{x^4}{L^4}\right)$$

$$\delta = \frac{(0{,}07 + 1{,}4) \times 10^3 \times 3{,}5^4}{48 \times 199{,}86 \times 10^6 \times 540767{,}1 \times 10^{-12}} \times \left(\frac{1{,}48}{3{,}5} - 3 \times \frac{1{,}48^3}{3{,}5^3} + 2 \times \frac{1{,}48^4}{3{,}5^4}\right)$$

$$\delta = 11{,}1 \text{ mm}$$

The permissible deflection is $L/200 = 3500/200 = 17{,}5$ mm > 11,1 mm, hence the calculated deflection is acceptable.

Comparison between sheeting in the annealed and cold worked conditions

A comparison of the bending resistance per unit width and resistance to local transverse forces of identical sheeting in the annealed condition (f_y = 280 N/mm^2) and cold worked condition (f_y = 460 N/mm^2) is given below:

f_y = 280 N/mm^2 (Design example 3) $M_{c,Rd}$ = 3,84 kNm and $R_{w,Rd}$ = 18,4 kN

f_y = 460 N/mm^2 (Design example 11) $M_{c,Rd}$ = 5,07 kNm and $R_{w,Rd}$ = 23,6 kN

With sheeting in the annealed condition, the span must be reduced to 2,9 m compared to 3,5 m for material in the cold worked strength condition. Hence, sheeting made from cold worked material enables the span to be increased, meaning that the number of secondary beams or purlins could be reduced, leading to cost reductions.

DESIGN EXAMPLE 12 – DESIGN OF A LIPPED CHANNEL SUBJECT TO BENDING

Design a lipped channel subject to bending with an unrestrained compression flange from austenitic grade 1.4401 in the cold worked condition CP500. The beam is simply supported with a span, $l = 4{,}0$ m. The distance between adjacent beams is 1,0 m.

As the load is not applied through the shear centre of the channel, it is necessary to check the interaction between the torsional resistance of the cross-section and the lateral torsional buckling resistance of the member. However, this example only checks the lateral torsional buckling resistance of the member.

Factors

Partial factor $\gamma_{M0} = 1{,}1$ and $\gamma_{M1} = 1{,}1$ — Table 4.1

Load factor $\gamma_G = 1{,}35$ (permanent loads) and $\gamma_Q = 1{,}5$ (variable loads) — EN 1991

Actions

Permanent actions (G): 2 kN/m^2

Variable actions (Q): 3 kN/m^2

Since the distance between adjacent beams is 1m,

$G_k = 2$ kN/m

$Q_k = 3$ kN/m

Load case to be considered at the ultimate limit state:

$$q^* = \sum_j \gamma_{G,j} G_{k,j} + \gamma_{Q,1} Q_{k,1} = 7{,}2 \text{ kN/m}$$

EN 1991

Structural Analysis

Reactions at support points (Design shear force)

$$V_{Ed} = \frac{q^* \times 4}{2} = 14{,}4 \text{ kN}$$

Design bending moment

$$M_{Ed} = \frac{q^* \times 4^2}{8} = 14{,}4 \text{ kNm}$$

Material Properties

$f_y = 460$ N/mm^2 — Table 2.3

Modulus of elasticity $E = 200000$ N/mm^2 and shear modulus $G = 76900$ N/mm^2 — Section 2.3.1

Cross-section Properties

The influence of rounded corners on cross-section resistance may be neglected if the internal radius $r \leq 5t$ and $r \leq 0{,}10 b_p$ and the cross section may be assumed to consist of plane elements with sharp corners. For cross-section stiffness properties the influence of rounded corners should always be taken into account. — Section 5.6.2

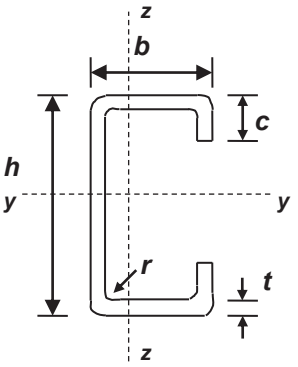

h = 160 mm
b = 125 mm
c = 30 mm
t = 5 mm
r = 5 mm

$r_m = r + t/2 = 7{,}5$ mm

$g_r = r_m\left[\tan(\varphi/2) - \sin(\varphi/2)\right] = 2{,}2$ mm

$b_p = b - t - 2g_r = 115{,}6$ mm — Figure 5.5

$r = 5 \text{ mm} \le 5t = 25$ mm

$r = 5 \text{ mm} \le 0{,}10 b_p = 11{,}56$ mm

The influence of rounded corners on section properties may be taken into account with sufficient accuracy by reducing the properties calculated for an otherwise similar cross-section with sharp corners, using the following approximations:

Notional flat width of the flange, $b_{p,f} = b - t - 2g_r = 115{,}6$ mm

Notional flat width of the web, $b_{p,w} = h - t - 2g_r = 150{,}6$ mm

Notional flat width of the lip, $b_{p,l} = c - t/2 - g_r = 25{,}3$ mm

$$A_{g,sh} = t\left[2b_{p,f} + b_{p,w} + 2b_{p,l}\right] = 2162 \text{ mm}^2$$

$$I_{yg,sh} = 2\times\left[\frac{1}{12}b_{p,f}t^3 + b_{p,f}t(0{,}5h - 0{,}5t)^2\right] + 2\times\left[\frac{1}{12}b_{p,l}^3 t + b_{p,l}t\left(0{,}5h - (c - b_{p,l}) - 0{,}5b_{p,l}\right)^2\right] +$$

$$+\frac{1}{12}b_{p,w}^3 t = 9{,}376\times10^6 \text{ mm}^4$$

$$\delta = 0{,}43\sum_{j=1}^{n} r_j \frac{\varphi_j}{90^o} \Big/ \sum_{i=1}^{m} b_{p,i} = 0{,}02$$ — Eq. 5.22

$A_g = A_{g,sh}(1 - \delta) = 2119$ mm^2 — Eq. 5.19

$I_g = I_{g,sh}(1 - 2\delta) = 9{,}0 \times 10^6$ mm^4 — Eq. 5.20

Classification of the cross-section — Section 5.3

$$\varepsilon = \left[\frac{235}{f_y}\frac{E}{210000}\right]^{0,5} = 0{,}698$$ — Table 5.2

Flange: Internal compression parts. Part subjected to compression.

$c = b_{p,f} = 115{,}6$ mm and $c/t = 23{,}12$

For Class 2, $c/t \le 35\varepsilon = 24{,}43$, therefore the flanges are Class 2

Web: Internal compression parts. Part subjected to bending.

$c = b_{p,w} = 150{,}6$ mm and $c/t = 30{,}12$

For Class 1, $c/t \le 72\varepsilon = 50{,}26$, therefore the web is Class 1.

Lip: Outstand flanges. Part subjected to compression, tip in compression.

$c = b_{p,l} = 25{,}30$ mm and $c/t = 5{,}06$

For Class 1, $c/t \leq 9\varepsilon = 6{,}28$, therefore the lip is Class 1.

Effects of shear lag

Section 5.4.2

Shear lag in flanges may be neglected if $b_0 < L_e/50$, where b_0 is taken as the flange outstand or half the width of an internal element and L_e is the length between points of zero bending moment.

For internal elements: $b_o = (b - t)/2 = 60$ mm

The length between points of zero bending moment is: $L_e = 4000$ mm, $L_e/50 = 80$ mm

Therefore shear lag can be neglected.

Flange curling

Section 5.4.3

Flange curling can be neglected if the curling of the flange towards the neutral axis, u, is less than 5% of the depth of the profile cross-section:

EN 1993-1-3, clause 5.4 Eq. 5.3a

$$u = 2\frac{\sigma_a^2}{E^2}\frac{b_s^4}{t^2 z}$$

σ_a is mean stress in the flanges calculated with gross area (f_y=460 N/mm^2 is assumed)

b_s = is the distance between webs $= b_{p,f} + b_{p,l} = 140{,}9$ mm

$t = 5$ mm

z = is the distance of the flange under consideration from neutral axis = 77,5 mm

$u = 2{,}15$ mm $< 0{,}05h = 8$ mm, therefore flange curling can be neglected.

Stiffened elements. Edge stiffeners

Distortional buckling. Plane elements with edge stiffeners

Section 5.5.1 and EN 1993-1-3, clause 5.5.3

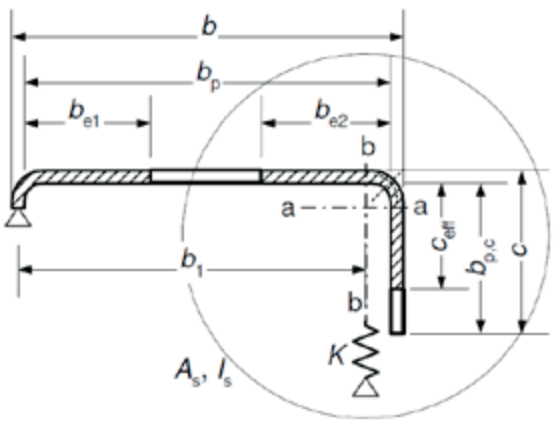

$b/t \leq 60$
a) single edge fold

Step 1: Initial effective cross-section for the stiffener

EN 1993-1-3, clause 5.5.3.2

For flanges (as calculated before)

$b = 125$ mm and $b_p = b_{p,f} = 115{,}6$ mm

For the lip, the effective width c_{eff} should be calculated using the corresponding buckling factor k_σ, $\bar{\lambda}_p$ and ρ expressions as follows:

$b_{p,c} = b_{p,l} = 25{,}30$ mm

$b_{p,c}/b_p = 0{,}22 < 0{,}35$ then $k_\sigma = 0{,}5$ — EN 1993-1-3, Eq. 5.13b

$$\bar{\lambda}_p = \frac{\bar{b}/t}{28{,}4\varepsilon\sqrt{k_\sigma}} = 0{,}36 \qquad (\bar{b} = 25{,}3\text{ mm})$$ — Eq. 5.3

Cold formed outstand elements: $\rho = \frac{1}{\bar{\lambda}_p} - \frac{0{,}188}{\bar{\lambda}_p^2} = 1{,}33 > 1$ then $\rho = 1{,}0$ — Eq. 5.2

$c_{eff} = \rho b_{p,c} = 25{,}30$ mm — EN 1993-1-3, Eq. 5.13a

Step 2: Reduction factor for distortional buckling

Calculation of geometric properties of effective edge stiffener section

$b_{e2} = b_{p,f} = 115{,}6$ mm

In this example, since the compressed flange is Class 2, b_{e2} already considers the whole flange and therefore $b_{e1} = 0$ is adopted.

$c_{eff} = b_{p,l} = 25{,}30$ mm

$A_s = (b_{e2} + c_{eff})t = (b_{b,f} + b_{b,l}) \times t = 704{,}5$ mm^2

Calculation of linear spring stiffness

$$K_1 = \frac{Et^3}{4(1-\upsilon^2)}\left(\frac{1}{b_1^2 h_w + b_1^3 + 0{,}5 b_1 b_2 h_w k_f}\right) = 6{,}4 \text{ N/mm}^2$$ — EN 1993-1-3, Eq. 5.10b

$b_1 = b - y_b - t/2 - r = 71{,}1$ mm (the distance from the web-to-flange junction to the gravity centre of the effective area of the edge stiffener, including the effective part of the flange b_{e2}).

$k_f = 0$ (flange 2 is in tension)

$h_w = h - 2t - 2r = 160 - 2\times5 - 2\times5 = 140$ mm

Elastic critical buckling stress for the effective stiffener section, adopting $K = K_1$

$$\sigma_{cr,s} = \frac{2\sqrt{KEI_s}}{A_s} = 565{,}8 \text{ N/mm}^2$$ — EN 1993-1-3, Eq. 5.15

Reduction factor χ_d for distortional buckling

$$\bar{\lambda}_d = \sqrt{f_{yb}/\sigma_{cr,s}} = 0{,}90$$ — EN 1993-1-3, Eq. 5.12d

$0{,}65 < \bar{\lambda}_d < 1{,}38$ then $\chi_d = 1{,}47 - 0{,}723\bar{\lambda}_d = 0{,}82$ — EN 1993-1-3, Eq. 5.12b

Reduced area and thickness of effective stiffener section, considering that $\sigma_{com,Ed} = f_{yb}/\gamma_{M0}$

$$A_{s,red} = \chi_d A_s \frac{f_{yb}/\gamma_{M0}}{\sigma_{com,Ed}} = 576{,}4 \text{ mm}^2$$ — EN 1993-1-3, Eq. 5.17

$t_{red} = tA_{s,red}/A_s = 4{,}1$ mm

Calculation of effective section properties with distortional buckling effect

$$A_{g,sh} = t\left[b_{p,f} + b_{p,w} + b_{p,l}\right] + t_{red}\left[b_{p,f} + b_{p,l}\right] = 2034{,}0 \text{ mm}^2$$

$$\delta = 0{,}43\sum_{j=1}^{n} r_j \frac{\varphi_j}{90^o} / \sum_{i=1}^{m} b_{p,i} = 0{,}02$$ — Eq. 5.22

$A_g = A_{g,sh}(1-\delta) = 1993{,}3$ mm^2 — Eq. 5.19

The new e_{eff}, adopting distances from the centroid of the web, positive downwards:

$$e_{\text{eff}} = \frac{-b_{\text{p,f}}t_{\text{red}}\left(0,5h-0,5t_{\text{red}}\right)+b_{\text{p,f}}t\left(0,5h-0,5t\right)-b_{\text{p,l}}t_{\text{red}}\left(0,5h-0,5t-g_{\text{r}}-0,5b_{\text{p,l}}\right)}{A_{\text{g,sh}}}$$

$$+\frac{b_{\text{p,l}}t\left(0,5h-0,5t-g_{\text{r}}-0,5b_{\text{p,l}}\right)+b_{\text{p,l}}0}{A_{\text{g,sh}}} = 4,7 \text{ mm}$$

$I_{\text{y,g,sh}}=$

$$\frac{1}{12}b_{\text{p,f}}t_{\text{tred}}^3+b_{\text{p,f}}t_{\text{red}}(0,5h-0,5t_{\text{red}}+e_{\text{eff}})^2+\frac{1}{12}b_{\text{p,l}}^3t_{\text{red}}+b_{\text{p,l}}t_{\text{red}}\left(0,5h-0,5t-g_{\text{r}}-0,5b_{\text{p,l}}+e_{\text{eff}}\right)^2$$

$$+\frac{1}{12}b_{\text{p,f}}t^3+b_{\text{p,f}}t(0,5h-0,5t-e_{\text{eff}})^2+\frac{1}{12}b_{\text{p,l}}^3t+b_{\text{p,l}}t\left(0,5h-0,5t-g_{\text{r}}-0,5b_{\text{p,l}}-e_{\text{eff}}\right)^2$$

$$+\frac{1}{12}b_{\text{p,w}}^3t+b_{\text{p,w}}t(e_{eff})^2 = 8,64\times10^6\,\text{mm}^4$$

$I_{\text{y,g}} = I_{\text{y,g,sh}}\,(1-2\delta) = 8,297\times10^6$ mm^4 — Eq. 5.20

$z_{\max} = h/2 + e_{\text{eff}} = 160/2 + 4,7 = 84,7$ mm (distance from the top fibre to the neutral axis)

$W_{\text{y,g}} = I_{\text{y,g}} / z_{\max} = 97,95\times10^3$ mm^3

Resistance of cross-section — Section 5.7

Cross-section subject to bending moment — Section 5.7.4

$M_{\text{c,Rd}} = W_{\text{pl}}f_{\text{y}} / \gamma_{\text{M0}} = 41,0$ kNm — Eq. 5.29

Design bending moment $M_{\text{Ed}} = 14,4$ kNm, therefore cross-section moment resistance is OK.

Cross-section subject to shear — Section 5.7.5

$A_{\text{v}} = 800$ mm^2

$V_{\text{pl,Rd}} = A_{\text{v}}\left(f_{\text{y}}/\sqrt{3}\right)/\gamma_{\text{M0}} = 193,15$ kN — Eq. 5.32

Design shear force $V_{\text{Ed}} = 14,4$ kN, therefore cross-section shear resistance is OK

Cross-section subjected to combination of loads — Section 5.7.6

$V_{\text{Ed}} = 14,4$ kN $>$ $0,5V_{\text{pl,Rd}} = 96,57$ kN

Therefore, there is no need to take into account interaction between bending moment and shear force.

Flexural members — Section 6.4

Lateral-torsional buckling — Section 6.4.2

$M_{\text{b,Rd}} = \chi_{\text{LT}}W_{\text{y}}f_{\text{y}}/\gamma_{\text{M1}}$ — Eq. 6.13

$$\chi_{\text{LT}} = \frac{1}{\phi_{\text{LT}}+\left[\phi_{\text{LT}}^2-\bar{\lambda}_{\text{LT}}^2\right]^{0,5}} \le 1$$ — Eq. 6.14

$$\phi_{\text{LT}} = 0,5\left(1+\alpha_{\text{LT}}\left(\bar{\lambda}_{\text{LT}}-0,4\right)+\bar{\lambda}_{\text{LT}}^2\right)$$ — Eq. 6.15

$$\bar{\lambda}_{\text{LT}} = \sqrt{\frac{W_{\text{y}}f_{\text{y}}}{M_{\text{cr}}}}$$ — Eq. 6.16

$\alpha_{\text{LT}} = 0,34$ for cold-formed sections

Determination of the elastic critical moment for lateral-torsional buckling

$$M_{cr} = C_1 \frac{\pi^2 EI_z}{(kL)^2}\left(\sqrt{\left(\frac{k}{k_w}\right)^2 \frac{I_w}{I_z} + \frac{(k\,L)^2 GI_t}{\pi^2 EI_z} + (C_2 z_g)^2} - C_2 z_g\right)$$ Eq. E.1

For simply supported beams with uniform distributed load: C_1 = 1,13, and C_2 = 0,454 Table E.2

Assuming normal conditions of restraint at each end: $k = k_w = 1$

z_a is the coordinate of point load application

z_s is the coordinate of the shear centre

$z_g = z_a - z_s = h/2 = 80$ mm

y_G = distance from the central axis of the web to the gravity centre

$$y_G = \frac{2b_{p,f}t(g_r + 0,5b_{p,f}) + 2b_{p,l}t(b - 0,5t)}{A_s} = 46,4 \text{ mm}$$

$I_{z,sh} = 4,590\times10^6$ mm^4

$I_{t,sh} = 18,02\times10^3$ mm^4

$I_{w,sh} = 23,19\times10^9$ mm^6

$I_z = I_{z,sh}\,(1–2\delta) = 4,406\times10^6$ mm^4

$I_t = I_{t,sh}\,(1–2\delta) = 17,30\times10^3$ mm^4

$I_w = I_{w,sh}\,(1–4\delta) = 21,33\times10^9$ mm^6

Then, $$M_{cr} = C_1 \frac{\pi^2 EI_z}{(kL)^2}\left(\sqrt{\left(\frac{k}{k_w}\right)^2 \frac{I_w}{I_z} + \frac{(k\,L)^2 GI_t}{\pi^2 EI_z} + (C_2 z_g)^2} - (C_2 z_g)\right) = 34,76 \text{ kNm}$$ Eq. E.1

$$\bar{\lambda}_{LT} = \sqrt{\frac{W_{y,g} f_y}{M_{cr}}} = 1,14$$ ($W_{y,g} = 97,95\times10^3$ mm^3, compression flange) Eq. 6.16

$$\phi_{LT} = 0,5\left(1 + \alpha_{LT}\left(\bar{\lambda}_{LT} - 0,4\right) + \bar{\lambda}_{LT}^{\,2}\right) = 1,27$$ Eq. 6.15

$$\chi_{LT} = \frac{1}{\phi_{LT} + \left[\phi_{LT}^{\,2} - \bar{\lambda}_{LT}^{\,2}\right]^{0,5}} = 0,54$$ Eq. 6.14

$$M_{b,Rd} = \chi_{LT} W_y f_y / \gamma_{M1} = 22,21 \text{ kNm}$$ Eq. 6.13

Design moment $M_{Ed} = 14,4$ kNm, therefore lateral torsional buckling resistance OK.

Note: As the load is not applied through the shear centre of the channel, it is also necessary to check the interaction between the torsional resistance of the cross-section and the lateral torsional buckling resistance of the member.

Shear buckling resistance Section 6.4.3

The shear buckling resistance only requires checking when $h_w / t \geq 56,2\varepsilon/\eta$ for an unstiffened web. Eq. 6.20

The recommended value for η = 1,20.

$h_w / t = (h - 2t - 2r)/t = 140/5 = 28,0$, $56,2\varepsilon/\eta = 32,67$, therefore no further check required.

Deflections — Section 6.4.6

Deflections should be determined for the load combination at the relevant Serviceability Limit State, with:

Load factors γ_G = 1,00 (permanent loads) and γ_Q = 1,00 (variable loads) — EN 1991

Permanent actions (G): 2 kN/m^2 and Variable actions (Q): 3 kN/m^2

Load case to be considered at SLS, assuming distance between adjacent beams is 1,0 m :

$$q = \sum_j \gamma_{G,j} G_{k,j} + \gamma_{Q,1} Q_{k,1} = 5{,}0 \text{ kN/m}$$ — EN 1991

The deflection of elastic beams may be estimated by standard structural theory, except that the secant modulus of elasticity should be used instead of the modulus of elasticity:

$$E_S = \frac{(E_{S1} + E_{S2})}{2}$$ — Eq. 6.52

where:
E_{S1} is the secant modulus corresponding to the stress in the tension flange and
E_{S2} is the secant modulus corresponding to the stress in the compression flange

E_{S1} and E_{S2} for the appropriate serviceability design stress can be estimated as follows:

$$E_{S,i} = \frac{E}{1 + 0{,}002 \dfrac{E}{\sigma_{i,Ed,ser}} \left(\dfrac{\sigma_{i,Ed,ser}}{f_y} \right)^n} \quad \text{and} \quad i = 1,2$$ — Eq. 6.53

where:
$\sigma_{i,Ed,ser}$ is the serviceability design stress in the tension or compression flange
n is the Ramberg Osgood parameter; for austenitic stainless steel 1.4401, n = 7. — Table 6.4

The non-linear stainless steel stress-strain relationship means that the modulus of elasticity varies within the cross-section and along the length of a member. As a simplification, the variation of E_S along the length of the member may be neglected and the minimum value of E_S for that member (corresponding to the maximum values of the stresses σ_1 and σ_2 in the member) may be used throughout its length.

The stresses in the tension and compression flanges are the following:

Compression flange:

$$\sigma_{Ed,ser,1} = \frac{M_{Ed,max}}{W_{y,sup}} = 102{,}1 \text{ MPa} \quad \text{and} \quad E_{S1} = 199979{,}2 \text{ MPa}$$ — Eq. 6.53

with $M_{Ed,max}$ = 10 kNm and W_y = 97,95×10^3 mm^3

Tension flange:

$$\sigma_{Ed,ser,2} = \frac{M_{Ed,max}}{W_{y,inf}} = 100{,}8 \text{ MPa} \quad \text{and} \quad E_{S2} = 199980{,}8 \text{ MPa}$$

with $M_{Ed,max}$ = 10 kNm and W_y = 99,24×10^3 mm^3

And therefore: E_S = 199980,0 MPa — Eq. 6.52

The maximum deflection can be estimated by standard structural theory assuming the secant modulus of elasticity:

$$d_{max} = \frac{5ql^4}{384 E_S I_y}$$

Since I_y = 8,297×10^6 mm^4, q = 5,0 kN/m and l = 4,0 m — Sheets 1 & 5

$$d_{max} = 10{,}0 \text{ mm}$$

DESIGN EXAMPLE 13 - HOLLOW SECTION LATTICE GIRDER

The lattice girder supports roof glazing and is made of square and rectangular hollow sections of grade 1.4301 stainless steel; a comparison is made between material in two strength levels - the annealed condition (f_y=210 N/mm^2) and in the cold worked condition (strength level CP500, f_y = 460 N/mm^2). Calculations are performed at the ultimate limit state and then at the fire limit state for a fire duration of 30 minutes. For the CP500 material, the reduction factors for the mechanical properties at elevated temperatures are calculated according to Section 8.2.

The structural analysis was carried out using the FE-program WINRAMI marketed by Finnish Constructional Steelwork Association (FCSA) (www.terasrakenneyhdistys.fi). The WINRAMI design environment includes square, rectangular and circular hollow sections for stainless steel structural analysis. WINRAMI solves the member forces, deflections and member resistances for room temperature and structural fire design and also joint resistance at room temperature (it also checks all the geometrical restraints of truss girder joints). In the example, the chord members are modelled as continuous beams and the diagonal members as hinge jointed. According to EN 1993-1-1, the buckling lengths for the chord and diagonal members could be taken as 0,9 times and 0,75 times the distance between nodal points respectively, but in this example conservatively the distance between nodal points has been used as the buckling length. The member forces were calculated by using WINRAMI with profile sizes based on the annealed strength condition. These member forces were used for both the annealed and CP500 girders.

This example focuses on checking 3 members: mainly axial tension loaded lower chord (member 0), axial compression loaded diagonal (member 31) and combination of axial compression and bending loaded upper chord member (member 5). The weight of the girders is also compared.

The welded joints should be designed according to the Section 7.4, which is not included in this example.

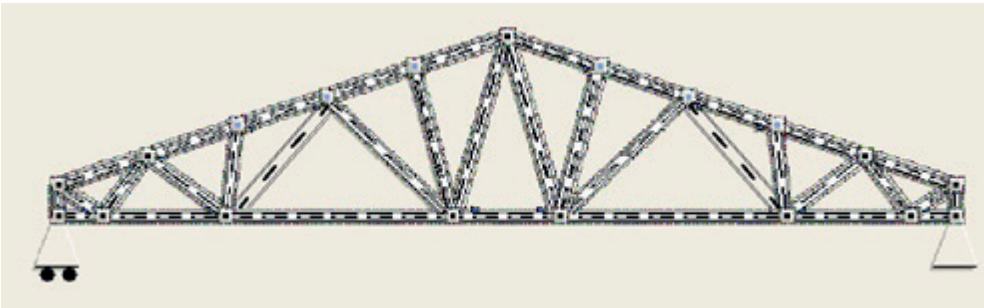

Annealed : lower chord 100x60x4, upper chord 80x80x5, corner vertical 60x60x5 diagonals from left to middle: 50x50x3, 50x50x3, 40x40x3, 40x40x3, 40x40x3,40x40x3, 40x40x3.
CP500 : lower chord 60x40x4, upper chord 70x70x4, corner vertical 60x60x5, all diagonals 40x40x3.

Span length 15 m, height in the middle 3,13 m, height at the corner 0,5 m.
Weight of girders: Annealed: 407 kg, CP500 307 kg. The weight is not fully optimised.

Actions

Assuming the girder carries equally distributed snow load, glazing and its support structures and weight of girder :

Permanent actions (G): Load of glazing and supports 1 kN/m^2

Dead load of girder (WINRAMI calculates the weight)

Variable actions (Q): Snow load 2 kN/m^2

Load case 1 to be considered (ultimate limit state): $\sum_j \gamma_{G,j} G_{k,j} + \gamma_{Q,1} Q_{k,1}$ — EN 1990

Load case 2 to be considered (fire situation): $\sum_j \gamma_{GA,j} G_{k,j} + \gamma_{\psi 1,1} Q_{k,1}$

Ultimate limit state (room temperature design)	Fire design
$\gamma_{G,j} = 1{,}35$ (unfavourable effects)	$\gamma_{GA,j} = 1{,}0$
$\gamma_{Q,1} = 1{,}5$	$\gamma_{\psi 1,1} = 0{,}2$

EN 1990
EN 1991-1-2

(Recommended partial factors for actions shall be used in this example)

Factored actions for ultimate limit state:

Permanent action: Load on nodal points: 1,35 x 4,1 kN

Self weight of girder (is included by WINRAMI)

Variable action Load from snow: 1,5 x 8,1 kN

Forces at critical members are:

Forces are determined by the model using profiles in the annealed strength condition

Lower chord member, member 0

Annealed: 100x60x4 mm, CP500: 60x40x4 mm

$N_{t,Ed} = 142{,}2$ kN, $N_{t,fi,Ed} = 46{,}9$ kN

$M_{max,Ed} = 0{,}672$ kNm, $M_{max,fire,Ed} = 0{,}245$ kNm

Upper chord member, member 5

Annealed: 80x80x5 mm, CP500: 70x70x4 mm

$N_{c,Ed} = -149{,}1$ kN, $N_{c,fire,Ed} = -49{,}2$ kN

$M_{max,Ed} = 2{,}149$ kNm, $M_{max,fire,Ed} = 0{,}731$ kNm

Diagonal member, member 31

Annealed: 50x50x3mm, CP500: 40x40x3 mm

$N_{c,Ed} = -65{,}9$ kN, $N_{c,fire,Ed} = -21{,}7$ kN

Material properties

Use material grade 1.4301.

Annealed:	$f_y = 210$ N/mm^2	$f_u = 520$ N/mm^2	$E = 200000$ N/mm^2	Table 2.2
CP500:	$f_y = 460$ N/mm^2	$f_u = 650$ N/mm^2	$E = 200000$ N/mm^2	Table 2.3

Partial factors

Table 4.1 and Section 8.1

The following partial factors are used throughout the design example:

$\gamma_{M0} = 1{,}1$, $\gamma_{M1} = 1{,}1$, $\gamma_{M,fi} = 1{,}0$

Cross-section properties: Annealed

Member 0:	$A = 1175$ mm^2			$W_{pl,y} = 37{,}93\times10^3$ mm^3
Member 5:	$A = 1436$ mm^2	$I_y = 131{,}44\times10^4$ mm^4	$i_y = 30{,}3$ mm	$W_{pl,y} = 39{,}74\times10^3$ mm^3
Member 31:	$A = 541$ mm^2	$I_y = 19{,}47\times10^4$ mm^4	$i_y = 19$ mm	$W_{pl,y} = 9{,}39\times10^3$ mm^3

Cross-section properties: CP500

Member 0:	A = 695 mm			$W_{pl,y}$ = 13,16×10^3 mm^3
Member 5:	A = 1015 mm^2	I_y = 72,12×10^4 mm^4	i_y = 26,7 mm	$W_{pl,y}$ = 24,76×10^3 mm^3
Member 31:	A = 421 mm^2	I_y = 9,32×10^4 mm^4	i_y = 14,9 mm	$W_{pl,y}$ = 5,72×10^3 mm^3

Classification of the cross-section of member 5 and member 31

Annealed : ε = 1,03 CP500 : ε = 0,698 — Table 5.2

Annealed 80x80x5 : c = 80 – 15 = 65 mm CP500 70x70x4 : c = 70 – 12 = 58 mm

Annealed 50x50x3 : c = 50 – 9 = 41 mm CP500 40x40x3 : c = 40 – 9 = 31 mm

Flange/web subject to compression: — Table 5.2

Annealed 80x80x5 : c/t = 13 CP500 70x70x4 : c/t = 14,5

Annealed 50x50x3 : c/t = 13,7 CP500 40x40x3 : c/t = 10,3

For Class 1, $\frac{c}{t} \leq 33{,}0\varepsilon$, therefore both profiles are classified as Class 1

LOWER CHORD MEMBER, DESIGN IN ROOM AND FIRE TEMPERATURE — (Member 0)

A) Room temperature design

Tension resistance of cross-section — Section 5.7.2

$N_{pl,Rd} = A_g f_y / \gamma_{M0}$ — Eq. 5.23

Annealed : $N_{pl,Rd}$ = 1175 ×210 / 1,1 = 224,3 kN > 142,2 kN OK.

CP500 : $N_{pl,Rd}$ = 695 × 460 / 1,1 = 290,6 kN > 142,2 kN OK.

Moment resistance of cross-section — Sec. 5.7.4

$M_{c,Rd} = W_{pl} f_y / \gamma_{M0}$ — Eq. 5.29

Annealed : $M_{c,Rd} = \frac{37{,}93 \times 10^3 \times 210}{1{,}1 \times 10^6}$ = 7,24 kNm > 0,672 kNm OK.

CP500 : $M_{c,Rd} = \frac{13{,}16 \times 10^3 \times 460}{1{,}1 \times 10^6}$ = 5,50 kNm > 0,672 kNm OK.

Axial tension and bending moment interaction

$$\frac{N_{Ed}}{N_{Rd}} + \frac{M_{y,Ed}}{M_{y,Rd}} \leq 1$$ — Eq. 6.55

Annealed : $\frac{142{,}2}{224{,}3} + \frac{0{,}672}{7{,}24} = 0{,}73 \leq 1$ OK.

CP500 : $\frac{142{,}2}{290{,}6} + \frac{0{,}672}{5{,}50} = 0{,}61 \leq 1$ OK.

B) Fire temperature design

ε_{res} = 0,4 — Section 8.4.4

Steel temperature for 100x60x4 after 30 min fire for A_m/V = 275 m^{-1}: θ = 833 °C

Steel temperature for 60x40x4 after 30 min fire for A_m/V = 290 m^{-1}: θ = 834 °C

Conservatively take θ = 834 °C.

Annealed :

The values for the reduction factors at 834 °C are obtained by linear interpolation: — Section 8.2 Table 8.1

$k_{2,\theta} = f_{2,\theta}/f_y = 0{,}292$, but $f_{2,\theta} \leq f_{u,\theta}$

$k_{u,\theta} = f_{u,\theta}/f_u = 0{,}209$

$f_{2,\theta} = 0{,}292 \times 210 = 61{,}3$ and $f_{u,\theta} = 0{,}209 \times 520 = 108{,}7$, therefore $f_{2,\theta} \leq f_{u,\theta}$

CP500 :

For material in the cold worked condition for $\theta \geq 800$ °C: — Section 8.2 Table 8.1

$k_{2,\theta,CF} = f_{2,\theta,CF}/f_y = 0{,}9k_{2,\theta} = 0{,}9f_{2,\theta}/f_y = 0{,}9\times0{,}292 = 0{,}263$, but $f_{2,\theta,CF} \leq f_{u,\theta,CF}$

$k_{u,\theta,CF} = k_{u,\theta} = f_{u,\theta,CF}/f_u = 0{,}209$

$f_{2,\theta,CF} = 0{,}263 \times 460 = 121{,}0$ and $f_{u,\theta,CF} = 0{,}209 \times 650 = 135{,}9$, therefore $f_{2,\theta,CF} \leq f_{u,\theta,CF}$

Tension resistance of cross-section

$N_{fi,\theta,Rd} = k_{2,\theta} N_{Rd} [\gamma_{M0} / \gamma_{M,fi}]$ — Eq. 8.8

Annealed : $N_{fi,\theta,Rd} = 0{,}292\times224{,}3\times1{,}1/1{,}0 = 72{,}0$ kN > 46,9 kN OK.

CP500 : $N_{fi,\theta,Rd} = 0{,}263\times290{,}6\times1{,}1/1{,}0 = 84{,}1$ kN > 46,9 kN OK.

Moment resistance of cross-section

$M_{fi,\theta,Rd} = k_{2,\theta} M_{Rd} \left[\gamma_{M0} / \gamma_{M,fi}\right]$ — Eq. 8.15

Annealed : $M_{fi,\theta,Rd} = 0{,}292\times7{,}24\times1{,}1/1{,}0 = 2{,}33$ kNm > 0,245 kNm OK.

CP500 : $M_{fi,\theta,Rd} = 0{,}263\times 5{,}50\times1{,}1/1{,}0 = 1{,}59$ kNm > 0,245 kNm OK.

Axial tension and bending moment interaction

$$\frac{N_{Ed}}{N_{Rd}} + \frac{M_{y,Ed}}{M_{y,Rd}} \leq 1$$

Annealed $\frac{46{,}9}{72{,}0} + \frac{0{,}245}{2{,}33} = 0{,}75 \leq 1$ OK — Eq. 6.55

CP500 : $\frac{46{,}9}{84{,}1} + \frac{0{,}245}{1{,}59} = 0{,}71 \leq 1$ OK.

DIAGONAL MEMBER DESIGN IN ROOM AND FIRE TEMPERATURE — (Member 31)

Buckling length = 1253 mm

A) Room temperature design

$N_{b,Rd} = \chi A f_y / \gamma_{M1}$ — Eq. 6.2

Annealed :

$$\bar{\lambda} = \frac{L_{cr}}{i}\frac{1}{\pi}\sqrt{(f_y / E)} = \frac{1253}{19}\frac{1}{\pi}\sqrt{(210/200000)} = 0{,}680$$ — Eq. 6.6

$\phi = 0{,}5(1 + \alpha(\bar{\lambda} - \bar{\lambda}_0) + \bar{\lambda}^2) = 0{,}5\times(1+0{,}49\times(0{,}680 - 0{,}3)+0{,}680^2) = 0{,}824$ — Eq. 6.5 Table 6.1

$$\chi = \frac{1}{\phi + \sqrt{(\phi^2 - \bar{\lambda}^2)}} = \frac{1}{0{,}824 + \sqrt{(0{,}824^2 - 0{,}680^2)}} = 0{,}776$$ — Eq. 6.4

$N_{b,Rd} = 0{,}776 \times 541 \times 210 / 1{,}1 = 80{,}1$ kN > 65,9 kN OK.

CP500 :

$$\bar{\lambda} = \frac{L_{cr}}{i}\frac{1}{\pi}\sqrt{(f_y / E)} = \frac{1253}{14,9} \times \frac{1}{\pi} \times \sqrt{(460 / 200000)} = 1,284$$ Eq. 6.6

$$\phi = 0,5(1 + \alpha(\bar{\lambda} - \bar{\lambda}_0) + \bar{\lambda}^2) = 0,5\times(1+0,49\times(1,284-0,3)+1,284^2) = 1,565$$ Eq. 6.5 Table 6.1

$$\chi = \frac{1}{\phi + \sqrt{(\phi^2 - \bar{\lambda}^2)}} = \frac{1}{1,565 + \sqrt{(1,565^2 - 1,284^2)}} = 0,407$$ Eq. 6.4

$N_{b,Rd}$ = 0,407×421 × 460 /1,1 = 71,7 kN > 65,9 kN OK.

B) Fire temperature design

ε_{res} = 0,4 — Section 8.4.4

Steel temperature for 80x80x5 after 30 min fire for A_m/V = 220 m^{-1}: θ = 830 °C

Steel temperature for 70x70x5 after 30 min fire for A_m/V = 225 m^{-1}: θ = 831 °C

Conservatively take θ = 831 °C.

Annealed :

The values for the reduction factors at 831 °C are obtained by linear interpolation: — Section 8.2 Table 8.1

$k_{p0,2,\theta}$ = 0,219 and $k_{E,\theta}$ = 0,574

Cross-section classification — Section 8.3.2

$$\varepsilon_\theta = \varepsilon\left[\frac{k_{E,\theta}}{k_{y,\theta}}\right]^{0,5} = 1,03\times\left[\frac{0,574}{0,219}\right]^{0,5} = 1,67$$ Eq. 8.6

Class 1 sections: $c/t \le 33,0\ \varepsilon_\theta$ = 33,0×1,67 = 55,1

Class 1, c/t = 13, therefore profile is classified as Class 1.

CP500 :

For material in the cold worked condition for $\theta \ge$ 800 °C: — Section 8.2 Table 8.1

$k_{p0,2,\theta,CF} = 0,8k_{p0,2,\theta}$ = 0,8×0,219 = 0,175

$k_{E,\theta,CF} = k_{E,\theta}$ = 0,574

Cross-section classification — Section 8.3.2

$$\varepsilon_\theta = \varepsilon\left[\frac{k_{E,\theta}}{k_{y,\theta}}\right]^{0,5} = 0,698\times\left[\frac{0,574}{0,175}\right]^{0,5} = 1,26$$ Eq. 8.6

Class 1 sections: $c/t \le 33,0\ \varepsilon_\theta$ = 33,0×1,26 = 41,6

Class 1, c/t = 14,5, therefore profile is classified as Class 1.

$N_{b,fi,t,Rd} = \chi_{fi} A k_{p0,2,\theta} f_y / \gamma_{M,fi}$ as both profiles are classified as Class 1. — Eq. 8.10

Annealed :

$$\bar{\lambda}_\theta = \bar{\lambda}\sqrt{(k_{p0,2,\theta} / k_{E,\theta})} = 0,680\times\sqrt{(0,219 / 0,574)} = 0,420$$ Eq. 8.14

$$\phi_\theta = 0,5(1 + \alpha(\bar{\lambda}_\theta - \bar{\lambda}_0) + \bar{\lambda}_\theta^2) = 0,5\times(1+0,49\times(0,420-0,3)+0,420^2) = 0,618$$ Eq. 8.13

$$\chi_{fi} = \frac{1}{\phi_\theta + \sqrt{(\phi_\theta^2 - \overline{\lambda}_\theta^2)}} = \frac{1}{0,618 + \sqrt{(0,618^2 - 0,420^2)}} = 0,933$$ Eq. 8.12

$N_{b,fi,t,Rd}$ = 0,933×541 ×0,219×210 /1,0 = 23,2 kN > 21,7 kN OK.

CP500 :

$$\overline{\lambda}_\theta = \overline{\lambda}\sqrt{(k_{p0,2,\theta,CF} / k_{E,\theta,CF})} = 1,284 \times \sqrt{(0,175 / 0,574)} = 0,709$$ Eq. 8.14

$$\phi_\theta = 0,5(1 + \alpha(\overline{\lambda}_\theta - \overline{\lambda}_0) + \overline{\lambda}_\theta^2) = 0,5\times (1+0,49\times (0,709-0,3)+0,709^2) = 0,852$$ Eq. 8.13

$$\chi_{fi} = \frac{1}{\phi_\theta + \sqrt{(\phi_\theta^2 - \overline{\lambda}_\theta^2)}} = \frac{1}{0,852 + \sqrt{(0,852^2 - 0,709^2)}} = 0,755$$ Eq. 8.12

$N_{b,fi,t,Rd}$ = 0,755×421 ×0,175×460 /1,0 = 25,6 kN > 21,7 kN OK.

UPPER CHORD MEMBER DESIGN IN ROOM AND FIRE TEMPERATURE (Member 5)

Buckling length = 1536 mm

A) Room temperature design

$$\frac{N_{Ed}}{(N_{b,Rd})_{min}} + k_y\left(\frac{M_{y,Ed} + N_{Ed}e_{Ny}}{\beta_{W,y}W_{pl,y}f_y / \gamma_{M1}}\right) \le 1,0$$ Eq. 6.56

Annealed *:*

$\beta_{W,y}$ = 1,0 Class 1 cross-section — Sec. 6.5.2

$k_y = 1+D_1(\overline{\lambda}_y - D_2)N_{Ed}/N_{b,Rd,y}$, but $k_y \le 1+ D_1(D_3 - D_2)N_{Ed}/N_{b,Rd,y}$ — Eq. 6.63

Where D_1 = 2,0, D_2 = 0,3 and D_3 = 1,3 — Table 6.6

$$\overline{\lambda} = \frac{L_{cr}}{i}\frac{1}{\pi}\sqrt{(f_y / E)} = \frac{1536}{30,3}\times\frac{1}{\pi}\times\sqrt{(210 / 200000)} = 0,523$$ Eq. 6.6

$$\phi = 0,5(1 + \alpha(\overline{\lambda} - \overline{\lambda}_0) + \overline{\lambda}^2) = 0,5\times(1+0,49\times(0,523-0,3)+0,523^2) = 0,691$$ Eq. 6.5

$$\chi = \frac{1}{\phi + \sqrt{(\phi^2 - \overline{\lambda}^2)}} = \frac{1}{0,691 + \sqrt{(0,691^2 - 0,523^2)}} = 0,875$$ Eq. 6.4

$N_{b,Rd,y}$ = 0,875×1436 ×210 /1,1 = 239,9 kN > 149,1 kN — Eq. 6.2

k_y = 1,0+2,0×(0,523 - 0,30)×149,1/239,9 = 1,277 — Table 6.6

$k_y \le$ 1,0+2,0×(1,3 -0,30)×149,1/239,9 = 2,243, therefore, k_y = 1,277

$$\frac{149,1}{239,9} + 1,277\times\left(\frac{2,149\times 1000^2}{1,0\times 39,74\times 10^3\times 210/1,1}\right) = 0,98 < 1,0 \text{ OK.}$$ Eq. 6.56

CP500

$\beta_{W,y}$ = 1,0 Class 1 cross-section — Sec. 6.5.2

$$\overline{\lambda} = \frac{L_{cr}}{i}\frac{1}{\pi}\sqrt{(f_y / E)} = \frac{1536}{26,7}\times\frac{1}{\pi}\times\sqrt{(460 / 200000)} = 0,878$$ Eq. 6.6

$$\phi = 0,5(1 + \alpha(\overline{\lambda} - \overline{\lambda}_0) + \overline{\lambda}^2) = 0,5\times(1+0,49\times(0,878-0,3)+0,878^2) = 1,027$$ Eq. 6.5

$$\chi = \frac{1}{\phi + \sqrt{(\phi^2 - \overline{\lambda}^2)}} = \frac{1}{1{,}027 + \sqrt{(1{,}027^2 - 0{,}878^2)}} = 0{,}641$$ Eq. 6.4

$N_{b,Rd,y}$ = 0,641×1015 ×460 /1,1 = 272,1 kN > 149,1 kN Eq. 6.2

k_y = 1,0+2×(0,878 - 0,30)×149,1/272,1 = 1,633 Table 6.6

$k_y \leq$ 1,0+2,0×(1,3 - 0,30)×149,1/272,1 = 2,096, therefore k_y = 1,633

$$\frac{149{,}1}{272{,}1} + 1{,}633 \times \left(\frac{2{,}149 \times 1000^2}{1{,}0 \times 24{,}76 \times 10^3 \times 460 / 1{,}1} \right) = 0{,}89 < 1{,}0 \text{ OK.}$$ Eq. 6.56

B) Fire temperature design

ε_{res} = 0,4 Section 8.4.4

Steel temperature for 50x50x3 after 30 min fire for A_m/V = 370 m^{-1}: θ = 836 °C

Steel temperature for 40x40x3 after 30 min fire for A_m/V = 380 m^{-1}: θ = 836 °C

Annealed :

The values for the reduction factors at 836 °C are obtained by linear interpolation: Section 8.2 Table 8.1

$k_{p0,2,\theta}$ = 0,214

$k_{2,\theta} = f_{2,\theta}/f_y$ = 0,289, but $f_{2,\theta} \leq f_{u,\theta}$

$k_{u,\theta} = f_{u,\theta}/f_u$ = 0,207

$f_{2,\theta}$ = 0,289 × 210 = 60,7 and $f_{u,\theta}$ = 0,207 × 520 = 107,6, therefore $f_{2,\theta} \leq f_{u,\theta}$

$k_{E,\theta}$ = 0,565

Cross-section classification Section 8.3.2

$$\varepsilon_\theta = \varepsilon \left[\frac{k_{E,\theta}}{k_{y,\theta}} \right]^{0,5} = 1{,}03 \times \left[\frac{0{,}565}{0{,}214} \right]^{0,5} = 1{,}67$$ Eq. 8.6

Class 1 sections: $c/t \leq 33{,}0\ \varepsilon_\theta$ = 33,0×1,67 = 55,1

Class 1, c/t = 13,7, therefore profile is classified as Class 1.

CP500 :

For material in the cold worked condition for θ ≥ 800 °C: Section 8.2 Table 8.1

$k_{p0,2,\theta,CF} = 0{,}8 k_{p0,2,\theta}$ = 0,8×0,214 = 0,171

$k_{2,\theta,CF} = f_{2,\theta,CF}/f_y = 0{,}9 k_{2,\theta} = 0{,}9 f_{2,\theta}/f_y$ = 0,9×0,289 = 0,260, but $f_{2,\theta,CF} \leq f_{u,\theta,CF}$

$k_{u,\theta,CF} = k_{u,\theta} = f_{u,\theta,CF}/f_u$ = 0,207

$f_{2,\theta,CF}$ = 0,260 × 460 = 94,8 and $f_{u,\theta,CF}$ = 0,207 × 650 = 134,6, therefore $f_{2,\theta,CF} \leq f_{u,\theta,CF}$

$k_{E,\theta,CF} = k_{E,\theta}$ = 0,565

Cross-section classification Section 8.3.2

$$\varepsilon_\theta = \varepsilon \left[\frac{k_{E,\theta}}{k_{y,\theta}} \right]^{0,5} = 0{,}698 \times \left[\frac{0{,}565}{0{,}171} \right]^{0,5} = 1{,}27$$ Eq. 8.6

Class 1 sections: $c/t \leq 33{,}0\ \varepsilon_\theta$ = 33,0×1,27 = 41,9

Class 1, c/t = 10,3 < 41,9, therefore profile is classified as Class 1.

$$\frac{N_{\text{fi,Ed}}}{\chi_{\text{min,fi}} A_{\text{g}} k_{\text{p0,2,}\theta} \dfrac{f_{\text{y}}}{\gamma_{\text{M,fi}}}} + \frac{k_{\text{y}} M_{\text{y,fi,Ed}}}{M_{\text{y,fi,}\theta\text{,Rd}}} \leq 1{,}0$$ as both profiles are classified as Class 1. — Eq. 8.26

Annealed :

$$\bar{\lambda}_{\theta} = \bar{\lambda}\sqrt{(k_{\text{p0,2,}\theta} / k_{\text{E,}\theta})} = 0{,}523 \times \sqrt{(0{,}214 / 0{,}565)} = 0{,}322$$ — Eq. 8.14

$$\phi_{\theta} = 0{,}5(1 + \alpha(\bar{\lambda}_{\theta} - \bar{\lambda}_{0}) + \bar{\lambda}_{\theta}^{2}) = 0{,}5\times(1+0{,}49\times(0{,}322-0{,}3)+0{,}322^2) = 0{,}557$$ — Eq. 8.13

$$\chi_{\text{fi}} = \frac{1}{\phi_{\theta} + \sqrt{(\phi_{\theta}^{2} - \bar{\lambda}_{\theta}^{2})}} = \frac{1}{0{,}557 + \sqrt{(0{,}557^{2} - 0{,}322^{2})}} = 0{,}989$$ — Eq. 8.12

$$k_{\text{y}} = 1 - \frac{\mu_{\text{y}} N_{\text{fi,Ed}}}{\chi_{\text{y,fi}} A_{\text{g}} k_{\text{p0,2,}\theta} f_{\text{y}} / \gamma_{\text{M,fi}}} \leq 3$$ — Eq. 8.30

$$\mu_{y} = (1{,}2\beta_{\text{M,y}} - 3)\bar{\lambda}_{\text{y,}\theta} + 0{,}44\beta_{\text{M,y}} - 0{,}29 \leq 0{,}8$$ — Eq. 8.31

$\chi_{\text{min,fi}} A_{\text{g}} k_{\text{p0,2,}\theta} f_{y} / \gamma_{\text{M,fi}}$ =0,989×1436 × 0,214×210 /1,0 = 63,8 kN > 49,2 kN OK. — Eq. 8.26

$M_{\text{y,fi,}\theta\text{,Rd}} = k_{2,\theta}[\gamma_{\text{M0}}/\gamma_{\text{M,fi}}]M_{\text{Rd}}$ = 0,289×1,1/1,0×39,74×10³×210/1000² = 2,65 kNm >0,731 kNm OK. — Eq. 8.15

ψ = -0,487 /0,731 = -0,666 — Table 8.3

$\beta_{\text{M,y}}$ = 1,8-0,7ψ = 2,266

μ_{y} = (1,2×2,266-3) ×0,322 + 0,44×2,266 – 0,29 = 0,617 < 0,8

k_{y} = 1- 0,617×49,2 kN/63,8 kN = 0,524 < 3

$$\frac{49{,}2}{63{,}8} + 0{,}524 \times \frac{0{,}731}{2{,}65} = 0{,}92 < 1{,}0 \quad \text{OK.}$$

CP500 :

$$\bar{\lambda}_{\theta} = \bar{\lambda}\sqrt{(k_{\text{p0,2,}\theta} / k_{\text{E,}\theta})} = 0{,}878 \times \sqrt{(0{,}171 / 0{,}565)} = 0{,}483$$ — Eq. 8.14

$$\phi_{\theta} = 0{,}5(1 + \alpha(\bar{\lambda}_{\theta} - \bar{\lambda}_{0}) + \bar{\lambda}_{\theta}^{2}) = 0{,}5\times(1+0{,}49\times(0{,}483-0{,}3)+0{,}483^2) = 0{,}661$$ — Eq. 8.13

$$\chi_{\text{fi}} = \frac{1}{\phi_{\theta} + \sqrt{(\phi_{\theta}^{2} - \bar{\lambda}_{\theta}^{2})}} = \frac{1}{0{,}661 + \sqrt{(0{,}661^{2} - 0{,}483^{2})}} = 0{,}899$$ — Eq. 8.12

$\chi_{\text{min,fi}} A_{\text{g}} k_{\text{p0,2,}\theta} f_{\text{y}} / \gamma_{\text{M,fi}}$ = 0,899×1015 ×0,171×460 /1,0 = 71,8 kN >49,2 kN OK. — Eq. 8.26

$M_{\text{y,fi,}\theta\text{,Rd}} = k_{2,\theta}[\gamma_{\text{M0}}/\gamma_{\text{M,fi}}]M_{\text{Rd}}$ = 0,260×1,1/1,0×24,76×10³×460/1000² = 3,26 kNm >0,731 kNm OK. — Eq. 8.15

ψ = -0,487 /0,731 = -0,666 — Table 8.3

$\beta_{\text{M,y}}$ = 1,8-0,7ψ = 2,266

μ_{y} = (1,2×2,266-3)×0,483 + 0,44×2,266 – 0,29 = 0,571 ≤ 0,8

k_{y} = 1- 0,571×49,2 /71,8 = 0,609

$$\frac{49{,}2}{71{,}8} + 0{,}609 \times \frac{0{,}731}{3{,}26} = 0{,}82 < 1{,}0 \quad \text{OK.}$$

DESIGN EXAMPLE 14 – DETERMINATION OF ENHANCED AVERAGE YIELD STRENGTH FOR COLD-FORMED SECTIONS

This worked example illustrates the determination of the enhanced average yield strength f_{ya} of a cold-rolled square hollow section (SHS) in accordance with the method in Annex B. The calculations are carried out for an SHS 80×80×4 in austenitic grade 1.4301 stainless steel. The predicted cross-section bending resistances based on the minimum specified yield strength f_y and the calculated enhanced average yield strength f_{ya} are then compared.

Enhanced average yield strength

For stainless steel cold-rolled box sections (RHS and SHS), the enhanced average yield strength f_{ya} is:

$$f_{ya} = \frac{f_{yc}\,A_{c,rolled} + f_{yf}(A - A_{c,rolled})}{A}$$ Eq. B.2

Cross-section properties

Geometric properties of SHS 80×80×4 (measured properties from a test specimen):

h = 79,9 mm b = 79,6 mm

t = 3,75 mm A = 1099 mm^2

W_{el} = 25967 mm^3 W_{pl} = 30860 mm^3

r_i = 4,40 mm (Note that r_i may be taken as 2t if not known) Appendix B

$$A_{c,rolled} = \left(n_c\,\pi\frac{t}{4}\right)(2r_i + t) + 4n_c t^2$$ Eq. B.14

$$A_{c,rolled} = \left(4\times\pi\times\frac{3{,}75}{4}\right)\times(2\times4{,}40 + 3{,}75) + 4\times4\times3{,}75^2 = 373\ \text{mm}^2$$

Material properties

f_y = 230 N/mm^2 and f_u = 540 N/mm^2 (for cold-rolled strip with t ≤ 8 mm) Table 2.2

$E = 200000\ \text{N/mm}^2$ Section 2.3.1

$\varepsilon_{p0,2} = 0{,}002 + f_y/E = 0{,}00315$ Eq. B.10

$\varepsilon_u = 1 - f_y/f_u = 0{,}57$ Eq. C.6

Corner and flat enhanced yield strengths

Predicted enhanced yield strength of corner regions f_{yc}:

$$f_{yc} = 0{,}85K\left(\varepsilon_c + \varepsilon_{p0,2}\right)^{n_p} \quad \text{and} \quad f_y \le f_{yc} \le f_u$$ Eq. B.4

Predicted enhanced yield strength of flat faces f_{yf}:

$$f_{yf} = 0{,}85K\left(\varepsilon_f + \varepsilon_{p0,2}\right)^{n_p} \quad \text{and} \quad f_y \le f_{yf} \le f_u$$ Eq. B.5

Corner and flat cold-work induced plastic strains

Strain induced in the corner regions ε_c:

$$\varepsilon_c = \frac{t}{2(2r_i + t)}$$ Eq. B.7

$$\varepsilon_c = \frac{3{,}75}{2 \times (2 \times 4{,}40 + 3{,}75)} = 0{,}149$$

Strain induced in the flat faces ε_f:

$$\varepsilon_f = \left[\frac{t}{900}\right] + \left[\frac{\pi t}{2(b + h - 2t)}\right]$$ Eq. B.8

$$\varepsilon_f = \left[\frac{3{,}75}{900}\right] + \left[\frac{\pi \times 3{,}75}{2 \times (79{,}6 + 79{,}9 - 2 \times 3{,}75)}\right] = 0{,}043$$

Material model parameters

$$n_p = \frac{ln(f_y/f_u)}{ln(\varepsilon_{p0,2}/\varepsilon_u)}$$ Eq. B.12

$$n_p = \frac{ln(230/540)}{ln(0{,}00315/0{,}57)} = 0{,}164$$

$$K = \frac{f_y}{\varepsilon_{p0,2}^{n_p}}$$ Eq. B.11

$$K = \frac{230}{(0{,}00315)^{0{,}164}} = 591{,}6\ N/mm^2$$

Corner and flat enhanced yield strengths

Predicted enhanced yield strength of corner regions f_{yc}: Eq. B.4

$$f_{yc} = 0{,}85 \times 591{,}6 \times (0{,}149 + 0{,}00315)^{0{,}164}$$

$$= 369\ \text{N/mm}^2 \text{ and } 230 \le 369 \le 540$$

Predicted enhanced yield strength of flat faces f_{yf}: Eq. B.5

$$f_{yf} = 0{,}85 \times 591{,}6 \times (0{,}043 + 0{,}00315)^{0{,}164}$$

$$= 304\ \text{N/mm}^2 \text{ and } 230 \le 304 \le 540$$

Section enhanced average yield strength

$$f_{ya} = \frac{f_{yc}\,A_{c,rolled} + f_{yf}(A - A_{c,rolled})}{A}$$ Eq. B.2

$$= \frac{369 \times 373 + 304 \times (1099 - 373)}{1099} = 326\ N/mm^2$$

Cross-section classification

Cross-section classification based on minimum specified yield strength f_y:

$$\varepsilon = \left[\frac{235}{f_y}\frac{E}{210\,000}\right]^{0,5} = \left[\frac{235}{230}\times\frac{200000}{210000}\right]^{0,5} = 0,986$$ Table 5.2

$$\frac{c}{t} = \frac{(79,9 - 3\times 3,75)}{3,75} = 18,3 < 32,5 = 33\varepsilon$$

Therefore, the cross-section is classified as Class 1.

Cross-section classification based on average yield strength f_y:

$$\varepsilon = \left[\frac{235}{f_y}\frac{E}{210\,000}\right]^{0,5} = \left[\frac{235}{326}\times\frac{200000}{210000}\right]^{0,5} = 0,829$$ Table 5.2

$$\frac{c}{t} = \frac{(79,9 - 3\times 3,75)}{3,75} = 18,3 < 27,4 = 33\varepsilon$$

Therefore, the cross-section is classified as Class 1.

Cross-sectional bending resistance

For a Class 1 or 2 section:

$$M_{c,Rd} = W_{pl}\, f_y/\gamma_{M0}$$ Eq. 5.29

Resistance based on minimum specified yield strength $\boldsymbol{f}_y$:

$$M_{c,Rd} = \frac{30860\times 230}{1,1} = 6,45\ kNm$$

Resistance based on enhanced average yield strength $\boldsymbol{f}_{ya}$:

$$M_{c,Rd} = \frac{30860\times 326}{1,1} = 9,15\ kNm$$

Taking into account the increased strength arising from strain hardening during section forming results in a 42% increase in bending resistance.

Note: Example 15 illustrates the additional enhanced cross-section bending resistance due to the beneficial influence of work hardening in service using the Continuous Strength Method, as described in Annex D.

DESIGN EXAMPLE 15 – CROSS-SECTION DESIGN IN BENDING USING THE CONTINUOUS STRENGTH METHOD (CSM)

This worked example determines the design value of the in-plane bending resistance of a cold-rolled SHS 80×80×4 beam in austenitic grade 1.4301 stainless steel according to the Continuous Strength Method (CSM) method given in Annex D.

Cross-section properties

The properties are given in Design Example 14.

Material properties

$f_y = 326$ N/mm^2 * and $f_u = 540$ N/mm^2 — Table 2.2

$E = 200000$ N/mm^2 and $\upsilon = 0{,}3$ — Section 2.3.1

$\varepsilon_y = f_y/E = 0{,}0016$

$\varepsilon_u = 1\text{-}f_y/f_u = 0{,}40$ — Eq. C.6

* In order to illustrate the extra bending resistance obtained by using the CSM, in addition to that obtained from employing the enhanced average yield strength of the section due to section forming, the yield strength is taken as the enhanced average yield strength from Design Example 14. The yield strength may alternatively be taken as the minimum specified value.

Cross-section slenderness

$$\bar{\lambda}_p = \sqrt{\frac{f_y}{f_{cr,p}}}$$ — D.3.2

$$f_{cr,p} = \frac{k_\sigma \pi^2 E t^2}{12(1-\upsilon^2)\bar{b}^2} = \frac{4 \times \pi^2 \times 200000 \times 3{,}75^2}{12 \times (1-0{,}3^2) \times \left(79{,}7 - 2(3{,}75 + 4{,}40)\right)^2} = 2530 \text{ N/mm}^2$$ — Eq. D.4 and Table 5.3

$$\bar{\lambda}_p = \sqrt{\frac{326}{2530}} = 0{,}36\ (< 0{,}68)$$

Cross-section deformation capacity

$$\frac{\varepsilon_{csm}}{\varepsilon_y} = \frac{0{,}25}{\bar{\lambda}_p^{\,3{,}6}} \leq \min\left(15, \frac{C_1 \varepsilon_u}{\varepsilon_y}\right) \quad \text{for } \bar{\lambda}_p \leq 0{,}68$$ — Eq. D.2

From Table D.1, $C_1 = 0.1$ for austenitic stainless steel. — Table D.1

$$\frac{\varepsilon_{csm}}{\varepsilon_y} = \frac{0{,}25}{0{,}36^{3{,}6}} = 9{,}9 \leq \min\left(15, \frac{0{,}1 \times 0{,}40}{0{,}0016} = 25\right)$$

$$\therefore \frac{\varepsilon_{csm}}{\varepsilon_y} = 9{,}9$$

Strain hardening slope

From Table D.1, $C_2 = 0{,}16$ for austenitic stainless steel. Table D.1

$$E_{sh} = \frac{f_u - f_y}{C_2\varepsilon_u - \varepsilon_y} = \frac{540 - 326}{0{,}16 \times 0{,}40 - 0{,}0016} = 3429 \text{ N/mm}^2$$ Eq. D.1

Cross-section in-plane bending resistance

$$M_{c,Rd} = M_{csm,Rd} = \frac{W_{pl} f_y}{\gamma_{M0}}\left[1 + \frac{E_{sh}}{E}\frac{W_{el}}{W_{pl}}\left(\frac{\varepsilon_{csm}}{\varepsilon_y} - 1\right) - \left(1 - \frac{W_{el}}{W_{pl}}\right) \Big/ \left(\frac{\varepsilon_{csm}}{\varepsilon_y}\right)^{\alpha}\right]$$ Eq. D.9

$\alpha = 2{,}0$ for RHS Table D.2

$$M_{c,Rd} = M_{csm,Rd}$$

$$= \frac{30860 \times 326}{1{,}1} \times \left[1 + \frac{3429}{200000} \times \frac{25967}{30860} \times (9{,}9 - 1) - \left(1 - \frac{25967}{30860}\right) \Big/ (9{,}9)^{2{,}0}\right]$$

$$M_{c,Rd} = 10{,}31 \text{ kNm}$$

The bending resistance determined according to Section 5 is 6,45 kNm. Consideration of strain hardening to give an average enhanced yield strength due to section forming in Example 14 resulted in a resistance of 9,15 kNm. With the added consideration of strain hardening in service using the CSM for cross-section design, a bending resistance of 10,31 kNm is achieved. This corresponds to an overall increase in resistance of 60%.

DESIGN MANUAL FOR STRUCTURAL STAINLESS STEEL
4TH EDITION

Stainless steel is used for a wide range of structural applications in aggressive environments where reliable performance over long periods with little maintenance is required. In addition, stainless steel has an attractive appearance, is strong yet still light, highly ductile and versatile in terms of manufacturing.

This Design Manual gives design rules for austenitic, duplex and ferritic stainless steels. The rules are aligned to the 2015 amendment of the Eurocode for structural stainless steel, EN 1993-1-4. They cover the design of cross-sections, members, connections and design at elevated temperatures as well as new design methods which exploit the beneficial strain hardening characteristics of stainless steel. Guidance on grade selection, durability and fabrication is also provided. Fifteen design examples are included which illustrate the application of the design rules.

SCI Ref: P413

ISBN 978-1-85942-226-7

SCI
Silwood Park, Ascot, Berkshire. SL5 7QN UK
T: +44 (0)1344 636525
F: +44 (0)1344 636570
E: reception@steel-sci.com
www.steel-sci.com